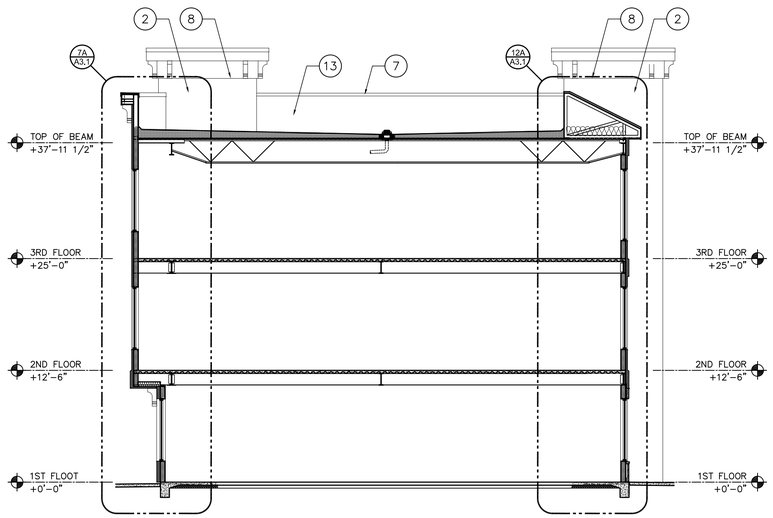

1G **BUILDING SECTION**

SCALE: 1/8" = 1'-0"

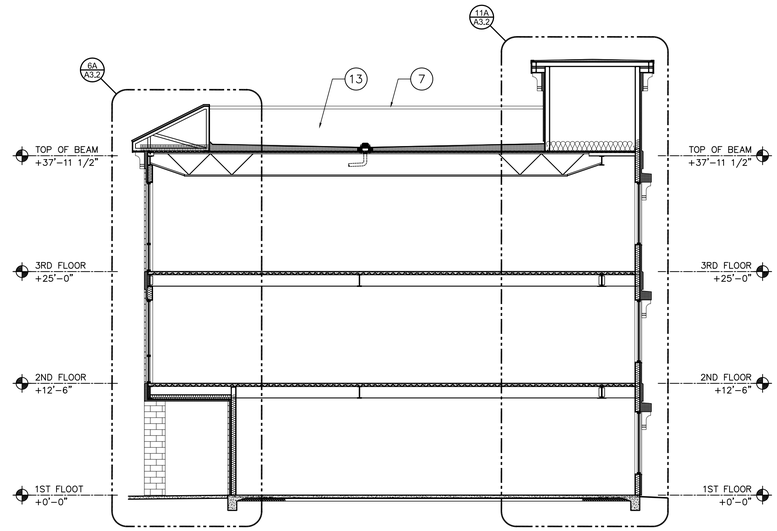

8G **BUILDING SECTION**

SCALE: 1/8" = 1'-0"

GENERAL NOTES:

A. ALL EXISTING CONSTRUCTION, FINISHES, AND EQUIPMENT SHOWN ARE TO REMAIN UNLESS NOTED OTHERWISE.

B. FIELD VERIFY ALL EXISTING CONDITIONS AND DIMENSIONS PRIOR TO THE START OF WORK

C. ALL DIMENSIONS ARE TO FACE OF STUD/ CMU BLOCK, UNLESS NOTED OTHERWISE. DIMENSION FOR MULTI-WYTHE WALLS ARE TO THE FACE OF THE PRIMARY STRUCTURAL CMU BLOCK.

CONSTRUCTION NOTES:

1. EFIS COLOR 1: CREAM (MATCH EXISTING)
2. EFIS COLOR 2: TAN – SMOOTH TEXTURE (MATCH EXISTING)
3. EFIS COLOR 3: GRAY (MATCH EXISTING)
4. DECORATIVE BRACKETS – EFIS COLOR 4: WHITE (MATCH EXISTING)
5. MASONRY – ENDURAMAX: CORDOVA STONE MIDNIGHT 8"X16"GROUND FACE; HOLCIM – LIME PUTTY 7 (MATCH EXISTING)
6. STANDING SEAM METAL ROOF & TRIM: CONSTR. METAL PRODUCTS–SLATE BLUE (MATCH EXISTING)
7. METAL COPING (MATCH EXISTING COLOR)
8. DECORATIVE SCORE JOINT
9. METAL FASCIA TO MATCH ROOF COLOR
10. EFIS SILL – COLOR 1: TAN (MATCH EXISTING)
11. FALSE BAHAMA SHUTTERS (MATCH EXISTING)
12. TOWER ELEMENT BEYOND
13. EXTEND ROOFING MEMBRANE UP PARAPET WALL & UNDER METAL COPING
14. NEW WINDOW IN EXISTING OPENING

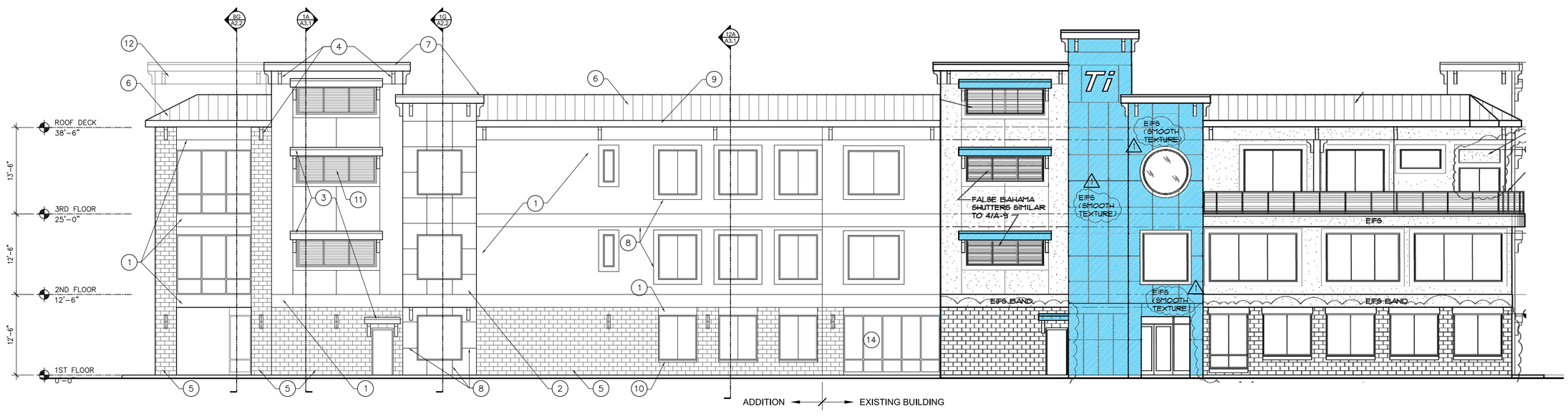

1A **NORTH ELEVATION**

SCALE: 1/8" = 1'-0"

PRELIMINARY
FOR REVIEW ONLY
NOT FOR CONSTRUCTION

GREAT PEOPLE WIMCO BUILDING SMART

Transportation Impact Addition
Building Shell
Emerald Isle, NC

Project Number: WMC-18059

401 North Herritage Street
Kinston, North Carolina 28501

phone: 252-527-1523
web: dunndalton.com

DUNN & DALTON ARCHITECTS

Issue Date: 1–18–19
Revisions:

A2.2

THIS DRAWING IS THE PROPERTY OF DUNN & DALTON, ARCHITECT, P.A.. THIS DRAWING IS NOT TO BE COPIED IN WHOLE OR IN PART. THIS DRAWING OR THE INFORMATION HEREUPON IS NOT TO BE USED ON ANY OTHER PROJECT AND MUST BE RETURNED TO DUNN & DALTON, ARCHITECTS, P.A. UPON REQUEST. COPYRIGHT 2019, DUNN & DALTON, ARCHITECTS, P.A.