Egret Landing Shopping Center

Emerald Isle, North Carolina

LEGEND OF STANDARD SYMBOLS

EXISTING / PROPOSED

- LIGHT POLE
- POLE / GUY
- TELECOMM. APPARATUS
- ELECTRIC APPARATUS
- GAS ASSEMBLY
- SANITARY MANHOLE
- CLEANOUT
- GREASE TRAP
- CATCH BASIN
- DRAINAGE STRUCTURE
- YARD INLET W/ GRATE
- YARD INLET W/ CONC CAP
- FIRE HYDRANT
- WATER VALVE
- WATER METER
- FIRE DEPT. CONNECTION
- POST INDICATOR VALVE
- WELL / BH BORE HOLE
- BURIED CABLE MARKER
- SIGN / LARGE SIGN
- HANDICAPPED SPACE
- OH — OVERHEAD UTILITY LINE
- —O—or—X— FENCE LINE
- UNDERGROUND PIPING
- APPROX WOODS LINE (TRUNK)
- GAS — GAS LINE MARKINGS
- T — E — UNDERGROUND LINE MARKINGS
- W — WATER LINE MARKINGS
- HORIZONTAL CONTROL POINT
- TEMPORARY BENCH MARK

ROCK INLET SEDIMENT TRAP	
NATURAL GROUND	NG 22.00
BACK OF CURB	BC 22.00
TOP OF ASPHALT	TA 22.00
EDGE OF PAVEMENT	EP 22.00
TOP OF CONCRETE	TC 22.00
TOP OF WALL	TW 22.00
TOP OF GRAVEL	TG 22.00
CONTOUR	31
OVERHEAD UTILITIES	OHU
STORM DRAINAGE LINES	
ROOF DRAIN	RD
UNDERGROUND ELECTRIC	UGE
SANITARY SEWER	S
CONDUIT	CON
WATER	W
FIRE WATER	F
GAS	GAS
SILT FENCE	SF
TEMPORARY DIVERSION DITCH	TDD
LIMIT OF DISTURBANCE	LOD
TURF REINFORCEMENT MAT (TRM)	
TRUNCATED DOMES	
SITE LIGHT	
SPILL GUTTER	
CLEANOUT	CO
HEAVY DUTY PAVING	
DROP TOP OF CURB FOR FUTURE CURB RAMP	CR
EXPOSED AGGREGATE DETECTABLE WARNING SURFACE	

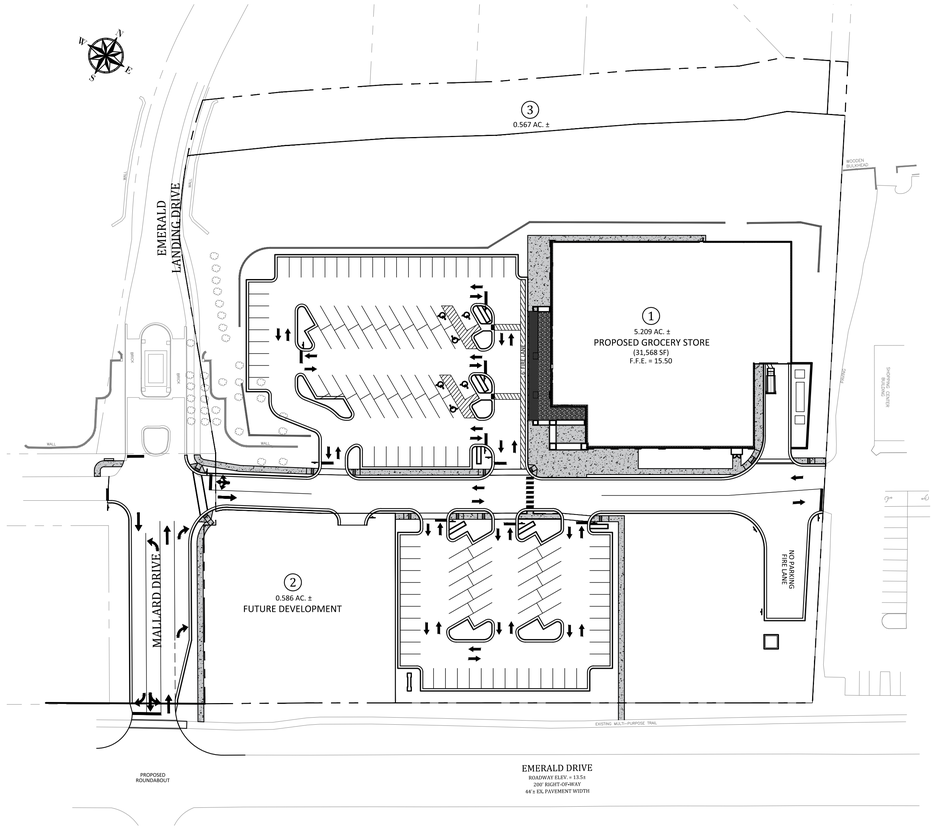

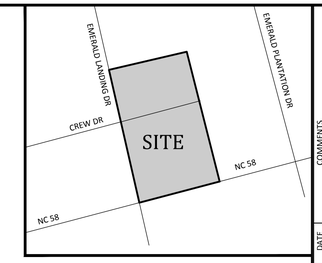

Vicinity Map
NOT TO SCALE

General Notes:

1. CONTACT NORTH CAROLINA ONE-CALL CENTER, INC. (NC ONE-CALL) AT 811 TO HAVE ALL UNDERGROUND UTILITIES LOCATED PRIOR TO EXCAVATING OR TRENCHING.
2. ALL REQUIRED IMPROVEMENTS SHALL CONFORM TO THE TOWN OF EMERALD ISLE ZONING ORDINANCE AND THE TOWN OF EMERALD ISLE DEVELOPMENT STANDARDS.
3. CONTRACTOR SHALL NOTIFY PUBLIC WORKS, STREET MAINTENANCE DIVISION 48 HOURS PRIOR TO MAKING CONNECTIONS TO EXISTING STORM DRAINS LOCATED WITHIN PUBLIC STORM DRAINAGE EASEMENTS OR RIGHT-OF-WAY.
4. A PORTION OF THE PROPERTY IS LOCATED WITHIN ZONE 'AE' AS DETERMINED FROM FEMA NATIONAL FLOOD INSURANCE PROGRAM FLOOD INSURANCE MAP NUMBER 3720538300J, EFFECTIVE DATE: 07/16/2003.
5. EXISTING CONDITIONS AS DEPICTED ON THESE PLANS ARE GENERAL AND ILLUSTRATIVE IN NATURE AND MAY NOT INCLUDE ALL MECHANICAL, ELECTRICAL AND MISCELLANEOUS STRUCTURES. IT IS THE RESPONSIBILITY OF THE CONTRACTOR TO EXAMINE THE SITE AND BE FAMILIAR WITH EXISTING CONDITIONS PRIOR TO BIDDING ON THE WORK FOR THIS PROJECT. IF CONDITIONS ENCOUNTERED DURING EXAMINATION ARE SIGNIFICANTLY DIFFERENT THAN THOSE SHOWN, THE CONTRACTOR SHALL NOTIFY THE ENGINEER IMMEDIATELY.
6. ELECTRIC AND TELEPHONE UTILITIES SHALL BE INSTALLED UNDERGROUND.
7. REFER TO ARCHITECTURAL PLANS FOR BUILDING DIMENSIONS.
8. REFER TO M.E.P. PLANS FOR COORDINATION OF BUILDING UTILITY SERVICES.
9. THIS PROJECT DISTURBS MORE THAN ½ ACRE FOR PURPOSES OF A SHOPPING CENTER PROJECT. STORMWATER AND EROSION & SEDIMENTATION CONTROL PLAN APPROVALS ARE REQUIRED.
10. DRIVEWAY PERMIT APPROVAL IS REQUIRED FOR THIS PROJECT.
11. REFUSE COLLECTION SHALL BE PROVIDED BY PRIVATE CARRIER.
12. ALL DIMENSIONS ARE TO BACK OF CURB UNLESS OTHERWISE NOTED.
13. SITE SHALL MEET ALL RELATED ACCESSIBILITY CODE REQUIREMENTS.
14. BOUNDARY AND TOPOGRAPHIC SURVEY INFORMATION SHOWN HEREON WAS PREPARED BY ROBERT MURPHY, PLLC. COPY OF SURVEY IS ATTACHED FOR REFERENCE.
15. UNDERGROUND UTILITIES PLOTTED IN PART FROM ACTUAL FIELD LOCATION OF ABOVE GROUND FEATURES AND IN PART FROM MAPS ON RECORD. ACTUAL LOCATIONS MAY VARY. SURVEYOR AND ENGINEER CANNOT PROVIDE ACCURACY OF INFORMATION TAKEN FROM RECORD DATA. OTHER UTILITIES MAY EXIST. CONTRACTOR SHOULD CONTACT NORTH CAROLINA ONE-CALL CENTER (NC ONE-CALL) AT 1-800-632-4949 TO HAVE UNDERGROUND UTILITIES LOCATED PRIOR TO EXCAVATING OR TRENCHING.
16. THE ENGINEER MAKES NO GUARANTEE THAT THE UTILITIES SHOWN ARE COMPRISED OF ALL SUCH UTILITIES IN THE AREA OF SURVEY EITHER IN SERVICE OR ABANDONED. THE ENGINEER FURTHER DOES NOT WARRANT THAT THE UNDERGROUND UTILITIES SHOWN ARE IN THE EXACT LOCATION INDICATED. THE ENGINEER DOES HEREBY CERTIFY THAT ALL UTILITIES ARE LOCATED AS ACCURATELY AS POSSIBLE FROM INFORMATION AVAILABLE. THE ENGINEER HAS NOT PHYSICALLY UNCOVERED AND LOCATED ANY UNDERGROUND UTILITIES.

Site Data

TOTAL ACREAGE IN SITE:	PARCEL 1 = 5.209± AC. PARCEL 2 = 0.586± AC. PARCEL 3 = 0.567± AC. TOTAL ACREAGE = 6.362± AC.
TAX PARCEL NUMBERS:	538307576783000 538311577415000 538311575400000
CURRENT ZONING:	BUSINESS (B)
TOTAL NO. OF PROPOSED PARKING SPACES:	PROPOSED LOT 1: REQUIRED - 1 SPACE FOR EACH 300 SQ. FT. OF GROSS RETAIL AREA, PLUS 1 SPACE FOR EACH EMPLOYEE LOT 1 REQUIRED PARKING = 122 SPACES (INCL. 5 HC) LOT 1 PROVIDED PARKING - 139 SPACES (INCL. 6 HC)
ADDRESS:	EXISTING PARCEL : 8810 EMERALD DRIVE EMERALD ISLE, NORTH CAROLINA 28594
EXISTING IMPERVIOUS AREA:	23,500 SF (8.5%)
PROPOSED IMPERVIOUS AREA:	LOT 1 = 125,900 SF (55%) LOT 2 = 19,600 SF (77%) LOT 3 = 0 SF (0%) TOTAL = 145,500 SF (52%)

SHEET INDEX

Sheet No. C-1	Cover Sheet
Sheet No. C-2	Site Plan
Sheet No. C-3	Utility Plan
Sheet No. C-4	Grading and Drainage Plan
Sheet No. LA-1	Site Landscape Plan
Sheet No. PS-1.0	Photometric Site Plan
Sheet No. PS-2.0	Fixture Cut Sheets
Sheet No. S-1	Topographic Survey

Owners

LAWRENCE S. SPELL, ETAL
8810 EMERALD DRIVE
EMERALD ISLE NC 28594

LRH TRUST PROPERTIES, LLC
100 WEST CHATHAM STREET
CARY, NC 27511

Developer

C4 EMERALD ISLE, LLC
4700 SIX FORKS ROAD, SUITE 150
RALEIGH NC 27609
PHONE: (919) 827-0848

SCALE 1 inch = 60 ft (60' 0 30' 60')

DATE	COMMENTS
07-22-16	ISSUED FOR SITE & STORMWATER PLAN REVIEW
08-11-16	REVISED PER NCDOT AND TOWN TRC COMMENTS

NOT RELEASED FOR CONSTRUCTION

REVISIONS:

CROSLAND SOUTHEAST

Cover Sheet

EGRET LANDING SHOPPING CENTER
EMERALD DRIVE & EMERALD LANDING DRIVE
EMERALD ISLE, CARTERET CO., NORTH CAROLINA

NORTH CAROLINA PROFESSIONAL SEAL 31970 ENGINEER BRIAN C. FAUNDINO
08/11/16

ARK Consulting Group, PLLC
Engineers & Planners
NC License: P-1199
3280 Charles Blvd. | Suite B
Greenville, NC 27858
(252) 558-0888
www.arkconsultinggroup.com

Project Manager:	BCF
Drawn By:	EW
Checked By:	STA
Project Number:	15035
Drawing Number:	D-1068

C-1

Date: 07-22-2016

D:\Dropbox (Ark Consulting Group)\01 - Ark Projects\Active Projects\Crosland SE\15035 - Retail - Emerald Isle\D - Drawings\D-1068 - Emerald Isle Retail.dwg, 1 Cover, Brian D, Thu Aug 11, 2016 at 4:42pm

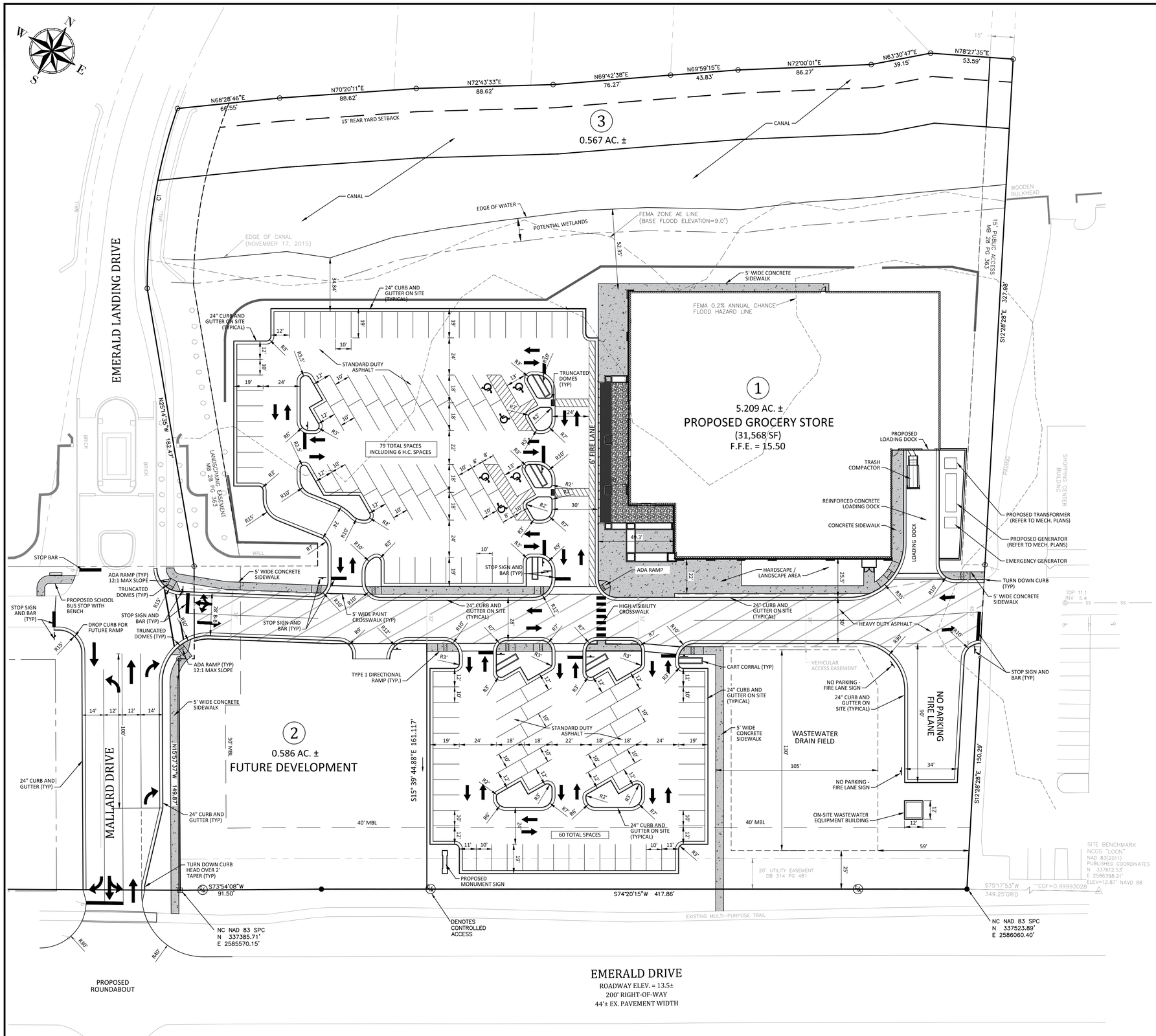

General Notes:

1. THE FOLLOWING DOCUMENTS ARE INCORPORATED BY REFERENCE AS PART OF THIS SITE PLAN:

- "ALTA/ASCM LAND TITLE SURVEY", PREPARED BY ROBERT MURPHY, PLLC FOR CROSLAND SOUTHEAST, LAST REVISED.
- "REPORT OF SUBSURFACE EXPLORATION AND GEOTECHNICAL ENGINEERING ANALYSIS" PREPARED BY ECS CAROLINAS, LLP, DATED MARCH 29, 2016.
- "PHASE I ENVIRONMENTAL SITE ASSESSMENT" PREPARED BY ECS CAROLINAS, LLP, DATED DECEMBER 29, 2015 ; ECS PROJECT NUMBER: 22-23657.
- "TRAFFIC IMPACT ANALYSIS - EMERALD ISLE COMMERCIAL DEVELOPMENT" PREPARED BY SEPI ENGINEERING CONSTRUCTION, DATED MARCH 2016.

PRIOR TO THE START OF CONSTRUCTION, THE CONTRACTOR SHALL VERIFY THAT HE / SHE HAS THE LATEST EDITION OF THE SITE PLAN AND THE DOCUMENTS REFERENCED ABOVE.

2. ALL ACCESSIBLE PARKING SPACES SHALL BE CONSTRUCTED TO MEET, AT A MINIMUM, THE MORE STRINGENT OF THE REQUIREMENTS OF THE "AMERICANS WITH DISABILITIES ACT" (ADA) CODE OR THE REQUIREMENTS OF THE JURISDICTION WHERE THIS PROJECT IS TO BE CONSTRUCTED.

3. PRIOR TO STARTING CONSTRUCTION, THE CONTRACTOR SHALL BE RESPONSIBLE TO ENSURE THAT ALL REQUIRED PERMITS AND APPROVALS HAVE BEEN OBTAINED. NO CONSTRUCTION OR FABRICATION SHALL BEGIN UNTIL THE CONTRACTOR HAS RECEIVED AND THOROUGHLY REVIEWED THE COMMENTS TO ALL PLANS AND OTHER DOCUMENTS REVIEWED AND APPROVED BY THE PERMITTING AUTHORITIES. CONTRACTOR SHALL HAVE COPIES OF ALL PERMITS AND APPROVALS ON SITE AT ALL TIMES.

4. THE OWNER / CONTRACTOR SHALL BE FAMILIAR WITH AND RESPONSIBLE FOR THE PROCUREMENT OF ANY AND ALL CERTIFICATIONS REQUIRED FOR THE ISSUANCE OF A CERTIFICATE OF OCCUPANCY.

5. ALL WORK SHALL BE PERFORMED IN ACCORDANCE WITH THESE PLANS AND SPECIFICATIONS AND ALL APPLICABLE REQUIREMENTS AND STANDARDS OF ALL GOVERNMENTAL ENTITIES HAVING JURISDICTION OVER THIS PROJECT.

6. THE GEOTECHNICAL REPORT AND RECOMMENDATIONS SET FORTH HEREIN ARE PART OF THE REQUIRED CONSTRUCTION DOCUMENTS, AND, IN CASE OF CONFLICT, SHALL TAKE PRECEDENCE UNLESS SPECIFICALLY NOTED OTHERWISE ON THE PLANS. THE CONTRACTOR SHALL NOTIFY THE ENGINEER IN WRITING OF ANY SUCH DISCREPANCY BETWEEN THE GEOTECHNICAL REPORTS AND PLANS AND SPECIFICATIONS PRIOR TO PROCEEDING WITH ANY FURTHER WORK.

7. THESE PLANS ARE BASED ON INFORMATION PROVIDED TO ARK CONSULTING GROUP, PLLC BY THE OWNER AND OTHERS PRIOR TO THE TIME OF PLAN PREPARATION. CONTRACTOR SHALL FIELD VERIFY EXISTING CONDITIONS AND NOTIFY ARK CONSULTING GROUP, PLLC IF ACTUAL SITE CONDITIONS DIFFER FROM THOSE SHOWN ON THE PLAN, OR IF THE PROPOSED WORK CONFLICTS WITH ANY OTHER ONSITE FEATURES.

8. ALL DIMENSIONS SHOWN ON THE PLANS SHALL BE FIELD VERIFIED BY THE CONTRACTOR PRIOR TO THE START OF CONSTRUCTION. CONTRACTOR SHALL NOTIFY ENGINEER IN WRITING IF ANY DISCREPANCIES EXIST PRIOR TO PROCEEDING WITH CONSTRUCTION. NO EXTRA COMPENSATION SHALL BE PAID TO THE CONTRACTOR FOR WORK HAVING TO BE REDONE DUE TO DIMENSIONS AND GRADES SHOWN INCORRECTLY ON THESE PLANS PRIOR TO THE GIVING OF SUCH NOTIFICATION AND THE ENGINEER'S WRITTEN AUTHORIZATION OF SUCH ADDITIONAL WORK.

9. CONTRACTOR SHALL REFER TO THE ARCHITECTURAL / BUILDING PLANS FOR EXACT LOCATIONS AND DIMENSIONS OF ENTRY / EXIT POINTS, ELEVATIONS, PRECISE BUILDING DIMENSIONS, AND EXACT BUILDING UTILITY LOCATIONS.

10. PRIOR TO THE START OF CONSTRUCTION, THE CONTRACTOR SHALL COORDINATE THE BUILDING LAYOUT BY CAREFUL REVIEW OF THE SITE PLAN AND LATEST ARCHITECTURAL PLANS (INCLUDING, BUT NOT LIMITED TO, STRUCTURAL, MECHANICAL, ELECTRICAL, PLUMBING AND FIRE SUPPRESSION PLAN, WHERE APPLICABLE). CONTRACTOR SHALL IMMEDIATELY NOTIFY OWNER, ARCHITECT AND SITE ENGINEER OF ANY DISCREPANCIES.

11. THE CONTRACTOR IS RESPONSIBLE FOR REPAIRING ANY DAMAGE DONE TO ANY NEW OR EXISTING CONSTRUCTION OR PROPERTY DURING THE COURSE OF CONSTRUCTION, INCLUDING, BUT NOT LIMITED TO, DRAINAGE, UTILITIES, PAVEMENT, STRIPING, CURB & GUTTER. CONTRACTOR SHALL BE RESPONSIBLE FOR AND SHALL REPLACE ALL SIGNAL INTERCONNECTION CABLE, WIRING CONDUITS, AND ANY UNDERGROUND ACCESSORY EQUIPMENT DAMAGED DURING CONSTRUCTION. THE REPAIR OF ANY SUCH NEW OR EXISTING CONSTRUCTION OR PROPERTY SHALL RESTORE SUCH CONNECTION OR PROPERTY TO A CONDITION EQUIVALENT TO OR BETTER THAN THE EXISTING CONDITIONS, AND IN CONFORMANCE WITH APPLICABLE CODES. CONTRACTOR IS RESPONSIBLE TO DOCUMENT ALL EXISTING DAMAGE AND NOTIFY THE OWNER'S REPRESENTATIVE PRIOR TO THE START OF CONSTRUCTION.

12. THE ENGINEER IS NOT RESPONSIBLE FOR CONSTRUCTION MEANS AND METHODS, NOR IS THE ENGINEER RESPONSIBLE FOR ANY CONFLICTS OR SCOPE REVISIONS WHICH RESULT FROM THE SAME. THE CONTRACTOR IS RESPONSIBLE FOR DETERMINING THE MEANS AND METHODS FOR COMPLETION OF THE WORK PRIOR TO THE COMMENCEMENT OF CONSTRUCTION.

DATE	COMMENTS
07-22-16	ISSUED FOR SITE & STORMWATER PLAN REVIEW
08-11-16	REVISED PER NCDOT AND TOWN TRC COMMENTS

NOT RELEASED FOR CONSTRUCTION

REVISIONS:

CROSLAND SOUTHEAST

SITE PLAN

EGRET LANDING SHOPPING CENTER

EMERALD DRIVE & EMERALD LANDING DRIVE
EMERALD ISLE, CARTERET CO., NORTH CAROLINA

NORTH CAROLINA PROFESSIONAL SEAL 31970 ENGINEER BRYAN C. FAGUNDES
08/11/16

NC License: P-1169
ARK Consulting Group, PLLC
Engineers & Planners
3280 Charles Blvd. | Suite B
Greenville, NC 27858
(252) 558-0888
www.arkconsultinggroup.com

Project Manager:	BCF
Drawn By:	EW
Checked By:	STA
Project Number:	15035
Drawing Number:	D-1068

C-2

Date: 07-22-2016

D:\Dropbox (Ark Consulting Group)\01 – Ark Projects\Active Projects\Crosland SE\15035 – Retail – Emerald Isle\D – Drawing\03 – Final Drawing\D-1068 – Emerald Isle Retail.dwg, 3 Site, Brian G, Thu Aug 11, 2016 at 4:42pm

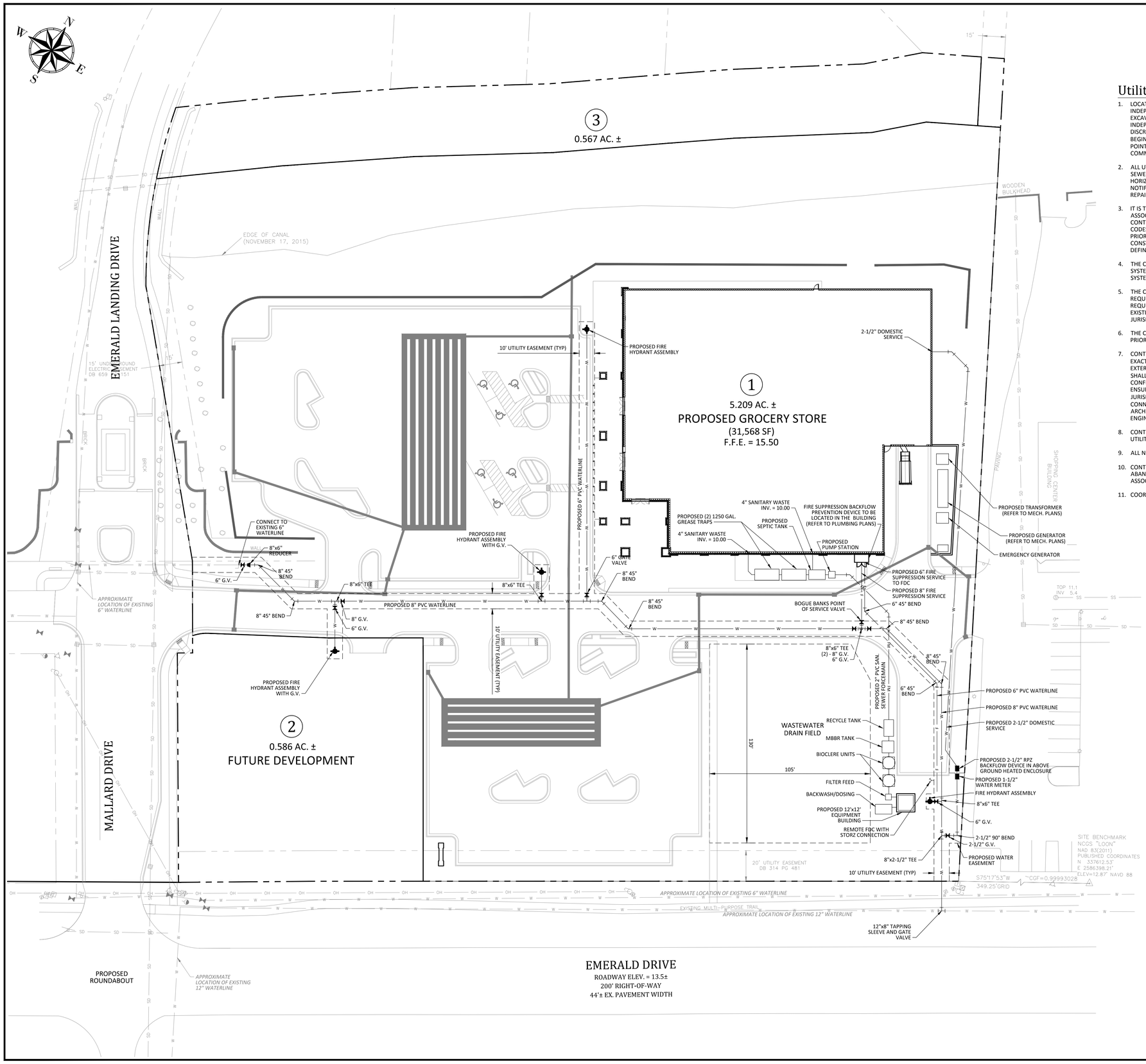

Utility Notes:

1. LOCATION OF ALL EXISTING AND PROPOSED SERVICES ARE APPROXIMATE AND MUST BE CONFIRMED INDEPENDENTLY WITH LOCAL UTILITY COMPANIES PRIOR TO COMMENCEMENT OF ANY CONSTRUCTION OR EXCAVATION. SANITARY SEWER AND ALL OTHER UTILITY SERVICE CONNECTION POINTS SHALL BE CONFIRMED INDEPENDENTLY BY THE CONTRACTOR IN THE FIELD PRIOR TO THE COMMENCEMENT OF CONSTRUCTION. DISCREPANCIES SHALL BE REPORTED IMMEDIATELY IN WRITING TO ENGINEER. CONSTRUCTION SHALL COMMENCE BEGINNING AT THE LOWEST INVERT (POINT OF CONNECTION) AND PROGRESS UPSTREAM. PROPOSED INTERFACE POINTS (CROSSINGS) WITH EXISTING UNDERGROUND UTILITIES SHALL BE FIELD VERIFIED BY TEST PIT PRIOR TO COMMENCEMENT OF CONSTRUCTION.
2. ALL UTILITIES AND SERVICES INCLUDING BUT NOT LIMITED TO GAS, WATER, ELECTRIC, SANITARY AND STORM SEWER, TELEPHONE, CABLE, FIBER OPTIC CABLE WITHIN THE LIMITS OF DISTURBANCE SHALL BE VERTICALLY AND HORIZONTALLY LOCATED. THE CONTRACTOR SHALL COMPLY WITH THE REQUIREMENTS OF THE APPLICABLE UTILITY NOTIFICATION SYSTEM TO LOCATE ALL THE UNDERGROUND UTILITIES. THE CONTRACTOR IS RESPONSIBLE FOR REPAIRS OF DAMAGE TO ANY EXISTING UTILITIES DURING CONSTRUCTION AT NO COST TO THE OWNER.
3. IT IS THE RESPONSIBILITY OF THE CONTRACTOR TO REVIEW ALL OF THE DRAWINGS AND SPECIFICATIONS ASSOCIATED WITH THE PROJECT WORK SCOPE PRIOR TO THE INITIATION OF CONSTRUCTION. SHOULD THE CONTRACTOR FIND A CONFLICT WITH THE DOCUMENTS RELATIVE TO THE SPECIFICATIONS OR THE RELATIVE CODES, IT IS THE CONTRACTOR'S RESPONSIBILITY TO NOTIFY THE PROJECT ENGINEER OF RECORD IN WRITING PRIOR TO COMMENCING CONSTRUCTION. FAILURE BY THE CONTRACTOR TO NOTIFY THE PROJECT ENGINEER SHALL CONSTITUTE ACCEPTANCE OF FULL RESPONSIBILITY BY THE CONTRACTOR TO COMPLETE THE SCOPE OF WORK AS DEFINED BY THE DRAWINGS AND IN FULL COMPLIANCE WITH LOCAL AND STATE REGULATIONS AND CODES.
4. THE CONTRACTOR SHALL DEFINE AND LOCATE VERTICALLY AND HORIZONTALLY ALL ACTIVE UTILITY SERVICE SYSTEMS THAT ARE TO BE REMOVED. THE CONTRACTOR IS RESPONSIBLE TO PROTECT AND MAINTAIN ALL ACTIVE SYSTEMS THAT ARE NOT BEING REMOVED OR RELOCATED DURING SITE ACTIVITIES.
5. THE CONTRACTOR SHALL FAMILIARIZE THEMSELVES WITH THE APPLICABLE UTILITY SERVICE PROVIDER REQUIREMENTS AND IS RESPONSIBLE FOR ALL COORDINATION REGARDING UTILITY DEMOLITION AS IDENTIFIED OR REQUIRED FOR THE PROJECT. THE CONTRACTOR SHALL PROVIDE THE OWNER WRITTEN NOTIFICATION THAT THE EXISTING UTILITIES AND SERVICES HAVE BEEN TERMINATED AND ABANDONED IN ACCORDANCE WITH JURISDICTION AND UTILITY COMPANY REQUIREMENTS.
6. THE CONTRACTOR SHALL INSTALL ALL STORM AND SANITARY SEWER COMPONENTS WHICH FUNCTION BY GRAVITY PRIOR TO THE INSTALLATION OF ALL OTHER UTILITIES.
7. CONTRACTOR IS RESPONSIBLE FOR COORDINATION OF SITE PLAN DOCUMENTS AND ARCHITECTURAL PLANS FOR EXACT BUILDING UTILITY CONNECTION LOCATIONS, GREASE TRAP REQUIREMENTS / DETAILS, DOOR ACCESS AND EXTERIOR GRADING. THE UTILITY SERVICE SIZES ARE TO BE DETERMINED BY THE ARCHITECT. THE CONTRACTOR SHALL COORDINATE INSTALLATION OF UTILITIES / SERVICES WITH THE INDIVIDUAL COMPANIES, TO AVOID CONFLICTS, AND TO ENSURE PROPER DEPTHS ARE ACHIEVED. THE CONTRACTOR SHALL BE RESPONSIBLE FOR ENSURING THAT INSTALLATION OF ALL IMPROVEMENTS COMPLIES WITH UTILITY REQUIREMENTS HAVING JURISDICTION, AND SHALL BE RESPONSIBLE FOR COORDINATING THE UTILITY TIE-INS / CONNECTIONS PRIOR TO CONNECTING TO THE EXISTING UTILITY / SERVICE. WHERE CONFLICTS EXIST WITH THESE PLANS, OR WHERE ARCHITECTURAL PLAN UTILITY CONNECTION POINTS DIFFER, THE CONTRACTOR SHALL IMMEDIATELY NOTIFY THE ENGINEER PRIOR TO CONSTRUCTION COMMENCEMENT TO RESOLVE.
8. CONTRACTOR'S PRICE FOR WATER SERVICE SHALL INCLUDE ALL FEES AND APPURTENANCES REQUIRED BY THE UTILITY TO PROVIDE A COMPLETE WORKING SERVICE.
9. ALL NEW UTILITIES, INCLUDING ELECTRIC, TELEPHONE, CABLE TV SHALL BE INSTALLED UNDERGROUND.
10. CONTRACTOR IS RESPONSIBLE FOR COORDINATING WITH UTILITY PROVIDERS FOR THE RELOCATION / ABANDONMENT OF EXISTING UTILITIES AND INSTALLATION OF NEW UTILITY SERVICES AS WELL AS FEES ASSOCIATED WITH SUCH WORK.
11. COORDINATE WITH MEP PLANS FOR ELECTRICAL SERVICE INFORMATION.

DATE	COMMENTS
07-22-16	ISSUED FOR SITE & STORMWATER PLAN REVIEW
08-11-16	REVISED PER NCDOT AND TOWN TRC COMMENTS

NOT RELEASED FOR CONSTRUCTION

REVISIONS:

CROSLAND SOUTHEAST

UTILITY PLAN

EGRET LANDING SHOPPING CENTER

EMERALD DRIVE & EMERALD LANDING DRIVE
EMERALD ISLE, CARTERET CO., NORTH CAROLINA

NORTH CAROLINA PROFESSIONAL SEAL 31970 ENGINEER BRIAN C. FAGUNDES
08/11/16

NC License: P-1169
ARK Consulting Group, PLLC
Engineers & Planners
3280 Charles Blvd. | Suite B
Greenville, NC 27858
(252) 558-0888
www.arkconsultinggroup.com

Project Manager:	BCF
Drawn By:	EW
Checked By:	STA
Project Number:	15035
Drawing Number:	D-1068

C-3

Date: 07-22-2016

D:\Dropbox (Ark Consulting Group)\01 - Ark Projects\Active Projects\Crosland SE\15035 - Retail - Emerald Isle\D - Drawing\03 - Final Drawing\D-1068 - Emerald Isle Retail.dwg, 5 Utility, Brian G., Thu Aug 11, 2016 at 4:42pm

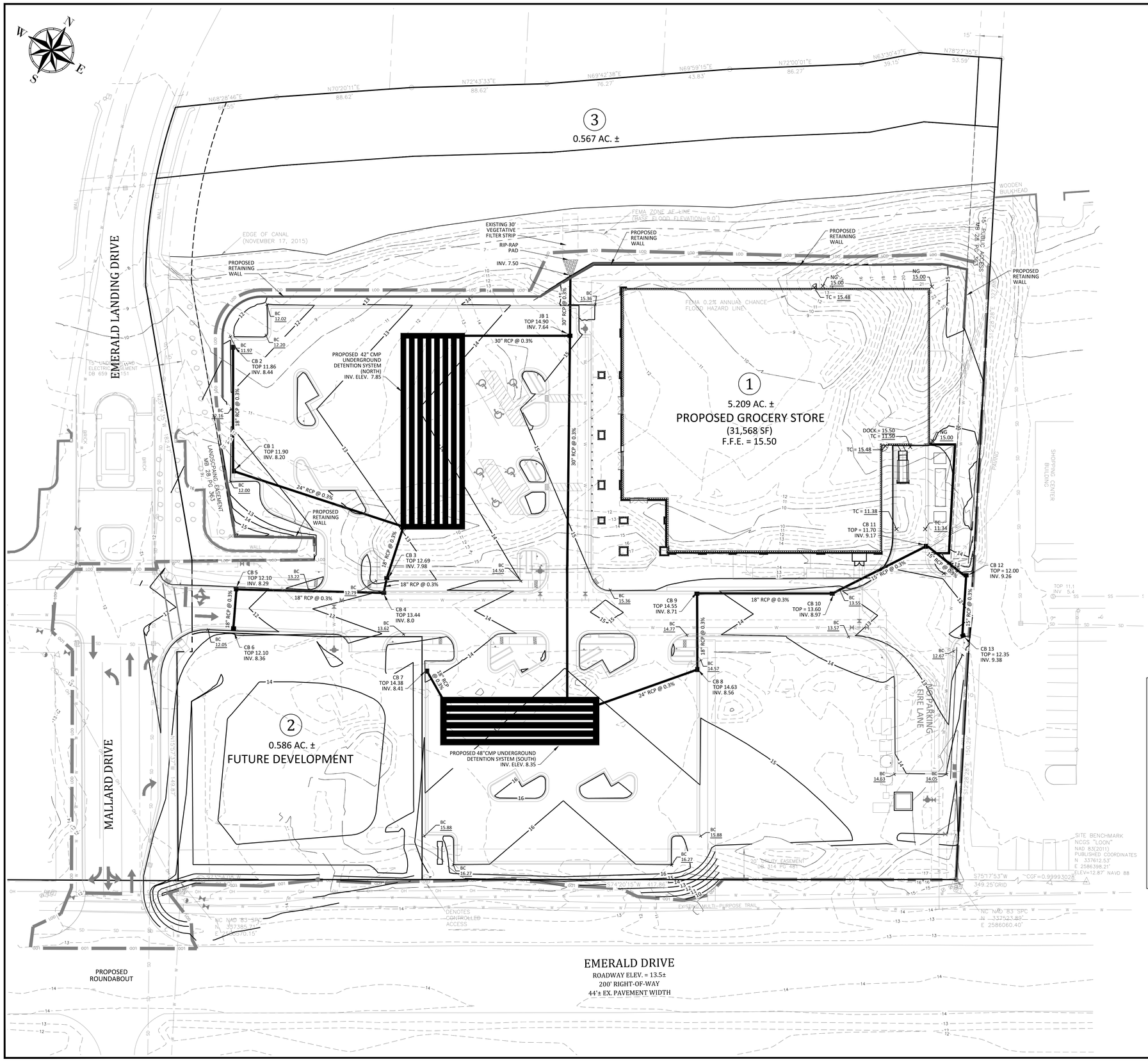

Grading Notes:

1. ALL AREAS WITHIN LIMITS OF DISTURBANCE SHALL BE CLEARED AND GRUBBED.
2. CONTRACTOR SHALL REMOVE EXISTING VEGETATION AND IMPROVEMENTS WITHIN LIMITS OF DISTURBANCE UNLESS NOTED OTHERWISE.
3. TREES OUTSIDE OF CONSTRUCTION LIMITS OR TREES NOT INDICATED TO BE REMOVED SHALL BE PROTECTED.
4. THE BURNING OF CLEARED MATERIAL AND DEBRIS SHALL NOT BE ALLOWED UNLESS CONTRACTOR GETS WRITTEN AUTHORIZATION FROM THE LOCAL AUTHORITIES.
5. ALL DEMOLITION WASTE AND DEBRIS SHALL BE REMOVED BY THE CONTRACTOR AND DISPOSED OF IN A STATE APPROVED WASTE SITE AND IN ACCORDANCE WITH ALL LOCAL AND STATE CODES AND PERMIT REQUIREMENTS.
6. CONTRACTOR TO GRADE ALL AREAS WITHIN THE LIMITS OF DISTURBANCE FROM BUILDING TO PROPERTY LINES AND TO EDGE OF PAVEMENT ON STREET SIDES, INCLUDING ROW.
7. TOP SOIL SHALL BE STRIPPED FROM ALL CUT AND FILL AREAS, STOCKPILED AND REDISTRIBUTED OVER GRADED AREAS. PROVIDE EROSION AND SEDIMENTATION CONTROLS AROUND STOCKPILES DURING CONSTRUCTION.
8. TILL SOIL TO A DEPTH OF 4" MINIMUM.
9. REMOVE ALL ROCKS LARGER THAN 1" MEASURED IN LARGEST DIRECTION.
10. GRADE ALL AREAS TO MAINTAIN POSITIVE SLOPE AWAY FROM BUILDING.
11. ALL GRADED AREAS TO RECEIVE SEED OR SOD, TOP SOIL, STRAW AND WATER UNTIL A HEALTHY STAND OF GRASS IS OBTAINED.
12. INSTALL TEMPORARY TURF REINFORCEMENT MATTING ON ALL SLOPES STEEPER THAN 3:1. MATTING SHALL BE CONTECH LANDLOK C2 OR EQUAL.
13. REFER TO SHEET C-7 FOR DETAILS OF PAVEMENT IN PARKING AND DRIVE AREAS.
14. DUMPSTER PAD AND APRON SHALL BE 6" THICK 4,000 PSI CONCRETE OVER NOT LESS THAN 4" OF COMPACTED AGGREGATE BASE COURSE. REINFORCING SHALL BE #4 REBAR @ 12" ON CENTER IN EACH DIRECTION. REBAR SHALL BE LOCATED IN UPPER 1/3 OF SLAB AND SUPPORTED ON CHAIRS.
15. ALL SIDEWALKS SHALL BE CONSTRUCTED OF 4" THICK 3,500 PSI CONCRETE REINFORCED WITH 6x6 W1.4xW1.4 WELDED WIRE FABRIC. ALL SIDEWALKS SHALL HAVE TOOLED CONTROL JOINTS NOT EXCEEDING 5' SPACING IN ANY DIRECTION.
16. ALL BUILDING, SIDEWALK, AND PAVEMENT SUB-GRADES SHALL BE COMPACTED TO 100% OF ASTM D698 TO A DEPTH OF 24" AND TO 95% OF ASTM D698 BELOW 24" DEPTHS. ALL OTHER NON-STRUCTURAL AREAS SHALL BE COMPACTED TO 90% OF ASTM D698.
17. ALL BUILDING, SIDEWALK, AND PAVEMENT SUB-GRADE COMPACTIONS SHALL BE INTERMEDIATELY TESTED AND APPROVED BY THE GEOTECHNICAL ENGINEER. ALL SUB-GRADES SHALL BE THOROUGHLY PROOF-ROLLED TO IDENTIFY SMALL LOCALIZED AREAS OF UNSUITABLE SOILS. ALL UNSUITABLE SOILS SHALL BE UNDERCUT, REPLACED WITH STRUCTURAL FILL, AND COMPACTED AS DESCRIBED ABOVE.

STORMWATER MANAGEMENT SUMMARY

PRE-DEVELOPMENT CONDITIONS

DRAINAGE AREA DESCRIPTION	DRAINAGE AREA	CN	TC (MIN.)	INTENSITY 2 YR	INTENSITY 10 YR
DA#1 - NORTH SIDE	2.69 AC.	47	12.1	4.46 INCHES	6.89 INCHES
DA#1 - SOUTH SIDE	2.05 AC.	47	12.1	4.46 INCHES	6.89 INCHES

POST-DEVELOPMENT CONDITIONS

DRAINAGE AREA DESCRIPTION	DRAINAGE AREA	CN	TC (MIN.)	INTENSITY 2 YR	INTENSITY 10 YR
DA#1 - NORTH SIDE	2.69 AC.	83	4.5	4.46 INCHES	6.89 INCHES
DA#1 - SOUTH SIDE	2.05 AC.	78	5.3	4.46 INCHES	6.89 INCHES

PRE - POST PEAK DISCHARGE ANALYSIS

	2 YEAR PEAK FLOW (CFS)		10 YEAR PEAK FLOW (CFS)	
DRAINAGE AREA DESCRIPTION	PRE-DEV	POST-DEV	PRE-DEV	POST-DEV
DA#1 - NORTH SIDE	0.57 CFS	0.52 CFS	4.39CFS	4.23 CFS
DA#1 - SOUTH SIDE	0.44 CFS	0.38 CFS	3.36 CFS	3.26 CFS

SCALE 1 inch = 30 ft

DATE	COMMENTS
07-22-16	ISSUED FOR SITE & STORMWATER PLAN REVIEW
08-11-16	REVISED PER NCDOT AND TOWN TRC COMMENTS

NOT RELEASED FOR CONSTRUCTION

REVISIONS:

CROSLAND SOUTHEAST

GRADING PLAN

EGRET LANDING SHOPPING CENTER

EMERALD DRIVE & EMERALD LANDING DRIVE
EMERALD ISLE, CARTERET CO., NORTH CAROLINA

NORTH CAROLINA PROFESSIONAL ENGINEER SEAL 31970 BRYAN C. FAGUNDES
08/11/16

NC License: P-1169

ARK Consulting Group, PLLC
Engineers & Planners
3280 Charles Blvd. | Suite B
Greenville, NC 27858
(252) 558-0888
www.arkconsultinggroup.com

Project Manager:	BCF
Drawn By:	EW
Checked By:	STA
Project Number:	15035
Drawing Number:	D-1068

C-4

Date: 07-22-2016

D:\Dropbox (Ark Consulting Group)\01 - Ark Projects\Active Projects\Crosland SE\15035 - Retail - Emerald Isle\0 - Drawing\03 - Final Drawings\D-1068 - Emerald Isle Retail.dwg, 6 Grading, Brian G. Thu Aug 11, 2016 at 4:42pm

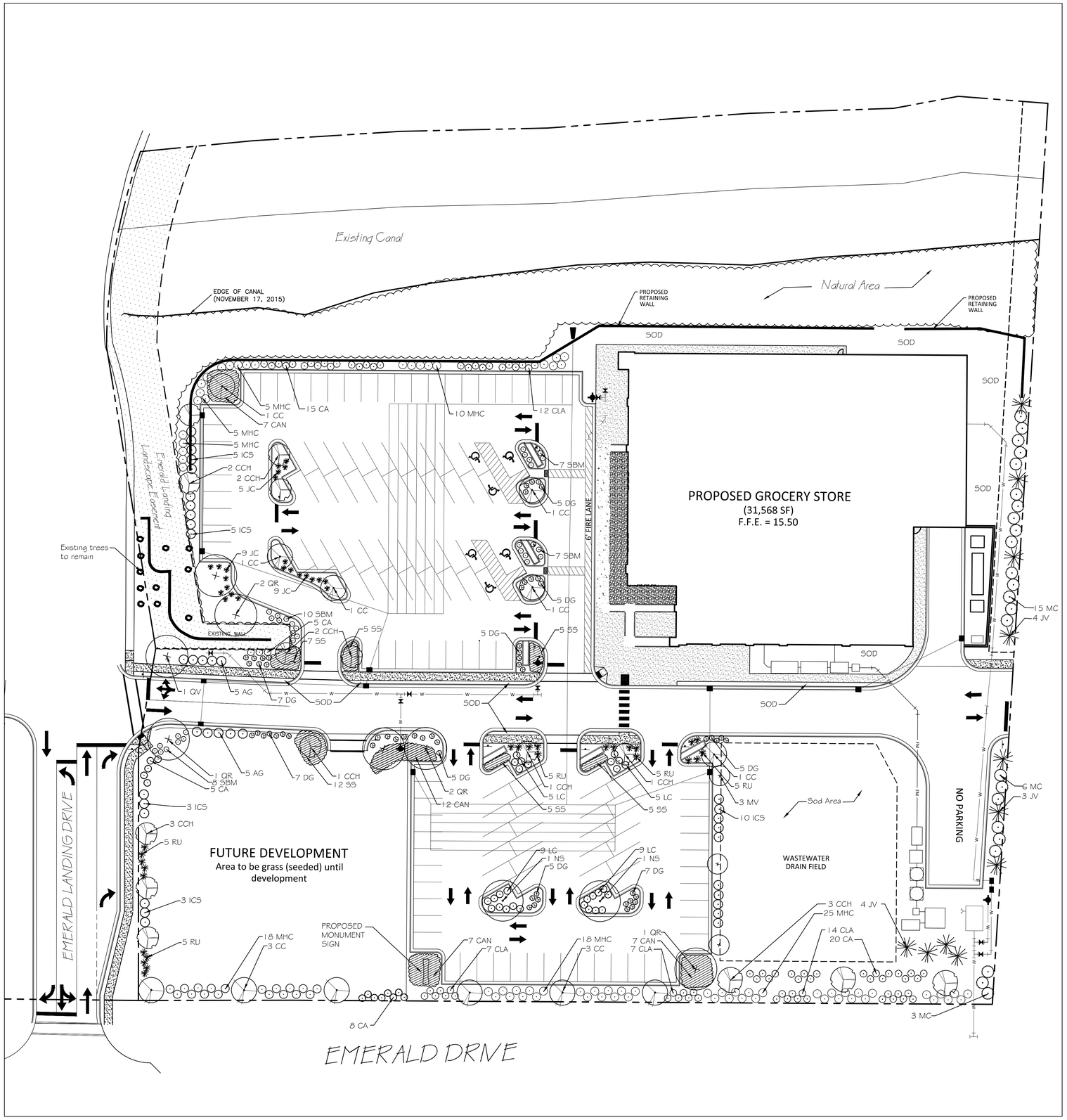

PLANTING NOTES:

1. All plant materials to comply with American Standard for Nursery Stock ANSI.Z60.
2. Plant locations to be approved in field prior to installation.
3. Substitutions of plant materials specified can only occur with prior approval by Landscape Architect.
4. Establish plant bed configurations. Landscape Architect to approve bed layout in field.
5. Install plants and mulch beds with 4" of pinestraw.
6. Establish mulch beds around existing trees to remain.
7. Plants to be relocated to be dug and replanted immediately.
8. Lawn areas to be seeded and strawed.
9. Landscape Contractor to maintain plant materials for a one year period following substantial completion per specifications
10. Areas damaged from plant relocation or other activities of Landscape Contractor to be reseeded and established at no additional cost to the owner.
11. Parking lot islands to include a 5' mulch ring around proposed trees. The remainder of the island to be planted as indicated.
Islands with no shrubs or a single tree to be mulched.
12. Trees adjacent to parking stalls to be planted a minimum of 3' from the back of curb. Shrubs planted in islands to maintain a 12" to 18" set back from the curb line.
13. Natural Area to remain undisturbed to the maximum extent practical during construction. Clearing, pruning and trimming shall be limited to small caliper vegetation and nuisance vegetation.

PLANT SCHEDULE

KEY	BOTANICAL / COMMON NAME	SIZE	ROOT	NOTES
NS	NYSSA SYLVATIC / BLACK GUM	3" CAL.	B & B	12' HT. when planted, 35' HT / 25' spread
ICS	ILEX CRENATA 'STEEDS' / HOLLY	24" HT.	CONT.	5 GALLON
CC	CERCIS CANADENSIS 'OKLAHOMA' / REDBUD	3" CAL	B & B	8' HT. when planted, 20' HT / 25' spread
PT	PINUS TAEDA / LOBLOLLY PINE	3" CAL	B & B	8' HT. when planted, 30' HT / 15' spread
CAN	COREOPSIS AURICULATA 'NANA' / TICKSEED	6" HT.	CONT.	1 GALLON; GRDCVER
JC	JUNIPERUS CONFERTA 'BLUE PACIFIC' / JUNIPER	6" HT.	CONT.	3 GALLON; GRDCVER
MV	MAGNOLIA VIRGINIANA / SWEETBAY MAGNOLIA	36" HT.	CONT.	7 GALLON, large shrub
QR	QUERCUS RUBRA / RED OAK	3" CAL.	B & B	12' HT. when planted, 50' HT / 50' spread
LC	LIMONIUM CAROLINIANUM / SEA LAVENDER	12" HT.	CONT.	1 GALLON, evergreen shrub, purple flowers
SBM	SPIRAEA X BUMALDA 'MAGIC CARPET' / SPIREA	12" HT.	CONT.	3 GALLON
DG	DEUTZIA GRACILIS 'NIKKO' / SLENDER DEUTZIA	12" HT.	CONT.	3GALLON
RU	RHAPHIOLEPIS UMBELLATA 'SNOW WHITE' / INDN HAWTHORN	24" HT.	CONT.	5 GALLON
AG	ABELIA X GRANDIFLORA 'LITTLE RICHARD' / ABELIA	12" HT.	CONT.	3 GALLON
MHC	MUHLENBERGIA CAPILLARIS / PINK MUHLY GRASS	12" HT.	CONT.	1 GALLON
CA	CALLICARPA AMERICANA / BEAUTYBERRY	24" HT.	CONT.	7 GALLON
CCH	CARPINUS CAROLINIA / HORNBEAM	3" CAL.	B & B	12' HT. when planted, 30' HT. 25' spread
JV	JUNIPERUS VIRGINIANA / EASTERN RED CEDAR	3" CAL.	B & B	10' HT. when planted
MC	MYRICA CERIFERA / SOUTHERN WAX MYRTLE	36" HT.	CONT.	7 GALLON
CLA	CLETHRA ALNIFOLIA / COAST SWEET PEPPER BUSH	24" HT.	CONT.	3 GALLON
SS	SCHIZACHYRIUM SCOPARIUM 'THE BLUES' / LITTLE BLUESTEM	12" HT.	CONT.	1 GALLON
QV	QUERCUS VIRGINIANA 'HIGHRISE' / LIVE OAK	3" CAL	B & B	12' HT. when planted, 50' HT / 50' spread
PV	PANICUM VIRGATUM 'SHENANDOAH' / RED SWITCHGRASS	24" HT.	CONT.	5 GALLON

NOTES:
1. SOIL MIX–1/3 ORGANIC MATTER, 2/3 EXIST SOIL.
2. WIDTH OF PLANT PIT
–SANDY SOIL, 24" WIDER THAN PLANT BALL
–CLAY SOIL, 12" WIDER THAN PLANT BALL
3. FOR PLANTING AREAS WHERE SOIL HAS BEEN COMPACTED BY EQUIP. CONTACT LA PRIOR TO PLANTING.
4. FOR CAMELLIAS, RHODOS, AZALEAS, AND LAUREL: SOIL MIX, 2/3 ORGANIC AND 1/3 EXISTING SOIL
5. SHRUB SHALL BEAR SAME RELATIONSHIP TO GRADE AS IT DID PRIOR TO DIGGING.

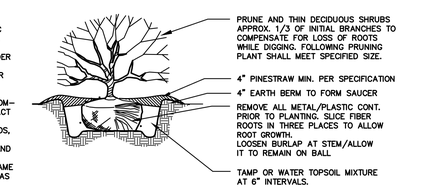

1 / LA-1 SHRUB PLANTING

NTS

NOTES:
1. Where several trees will be planted close together such that they will likely share root space, till in soil amendments to a depth of 4–6" (10–15cm) over the entire area
2. For container–grown trees, use fingers or small hand tools to pull the roots out of the outer layer of potting soil; then cut or pull apart any roots circling the perimeter of the container.
3. During the design phase, confirm that water drains out of the soil; use lowered planting hole depth and design alternate drainage system as required.
4. Thoroughly soak root ball and adjacent prepared soil several times during first month after planting and regularly throughout the following two summers.
5. The planting process is similar for deciduous and evergreen trees.
6. Do not wrap trunk; Mark the north side of the tree in the nursery and locate to the north in the field.
7. Avoid purchasing trees with two leaders or remove one at planting. Otherwise, do not prune tree at planting except for specific structural corrections
8. Before planting, add 3–4" of well–composted leaves, recycled yard waste or other compost and till into top 6" of prepared soil. Add compost at 20–33% by volume to backfill soil. Add compost at 20–33% by volume to backfill

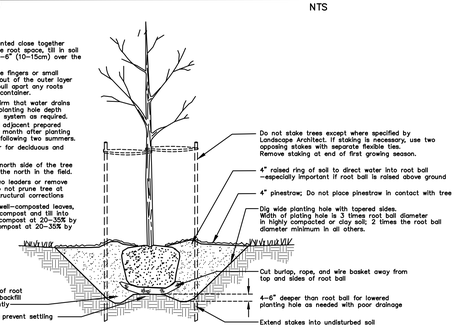

3 / LA-1 TREE PLANTING

NTS

LANDSCAPE PLAN

30 15 0 30 60

REVISIONS:

DATE	COMMENTS

COALY DESIGN
LANDSCAPE ARCHITECTURE
537 E. Martin Street
Raleigh, NC 27601
919.539.0012

LANDSCAPE PLAN

EMERALD ISLE RETAIL

EMERALD DRIVE & MALLARD DRIVE
EMERALD ISLE, CARTERET CO., NORTH CAROLINA

NORTH CAROLINA REGISTERED LANDSCAPE ARCHITECT
KIMBERLY J. WICKER
8-8-16

NC License: P-1199
ARK Consulting Group, PLLC
Engineers & Planners
3280 Charles Blvd. | Suite B
Greenville, NC 27858
(252) 558-0888
www.arkconsultinggroup.com

Project Manager:	W
Drawn By:	RAP
Checked By:	W
Project Number:	0000
Drawing Number:	0000

LA-1

Date: 07-08-2016

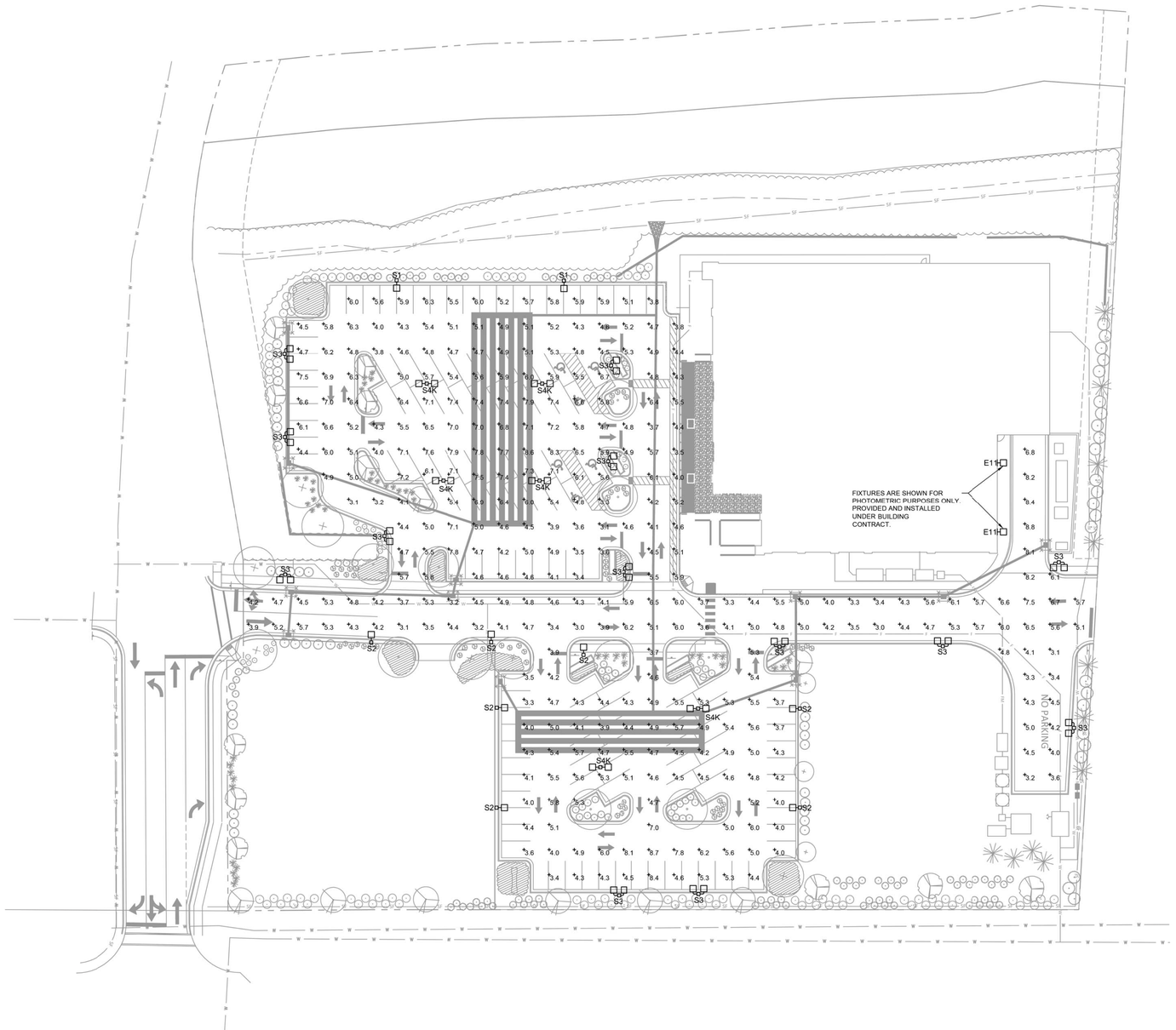

NORTH

PHOTOMETRIC SITE PLAN

SCALE: 1" = 30'-0"

Schedule									
Symbol	Label	QTY	Manufacturer	Catalog Number	Number Lamps	Filename	Lumens per Lamp	LLF	Wattage
	E11	2	BEACON PRODUCTS	TRV-X-60NB-136-5K/T3/UNV	1	TRV-X-60NB-136-5K-T3.IES	13903.32	0.95	135.8
	S1	2	BEACON	VP-L-64NB-136-4K-T2	1	VP-L-64NB-136-4K-T2.ies	14048	0.95	142.05
	S2	7	BEACON	VP-L-64NB-136-4K-T3	1	VP-L-64NB-136-4K-T3.ies	13743	0.95	141.38
	S3	13	BEACON	VP-L-64NB-136-4K-T3	1	VP-L-64NB-136-4K-T3.ies	13743	0.95	282.76
	S4K	6	BEACON	VP-L-64NB-136-4K-T5R	1	VP-L-64NB-136-4K-T5R.ies	16092	0.95	280.8

Statistics						
Description	Symbol	Avg	Max	Min	Max/Min	Avg/Min
Parking Lot	+	5.2 fc	8.8 fc	3.0 fc	2.9:1	1.7:1

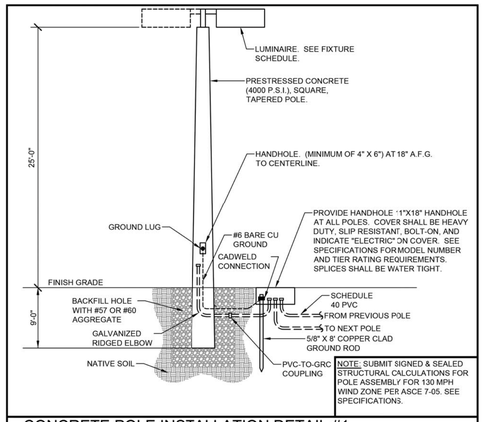

CONCRETE POLE INSTALLATION DETAIL #1

SCALE: NONE

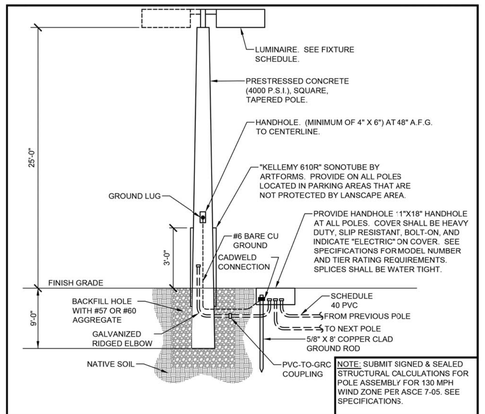

CONCRETE POLE INSTALLATION DETAIL #2

SCALE: NONE

APOLLO ENGINEERING, INC
CONSULTING ENGINEERS
C-4043
6544 U.S. Hwy 41 North, Suite 269B, Apollo Beach, FL 33572
Phone: 813.928.5860 / Fax: 813.928.5865
Job # 10074

Copyright 2016 - All rights reserved.

Hiscutt & Associates
ARCHITECTURE
3655 Brookside Parkway
Suite 575
Alpharetta, Georgia 30022
Phone: 770.753.8787
Web: www.hiscutt-aia.com

08/10/16

THESE DOCUMENTS ARE INSTRUMENTS OF SERVICE FOR USE SOLELY WITH RESPECT TO THIS PROJECT AND ARE NOT TO BE REPRODUCED OR USED FOR THE CONSTRUCTION OF ANOTHER PROJECT WITHOUT SPECIFIC AUTHORIZATION. COPYRIGHT 2016 HISCUTT & ASSOCIATES, INC.

PROJECT:
EGRET LANDING SHOPPING CENTER
Emerald Drive and Mallard Drive
Emerald Isle, North Carolina

FOR:
Crosland Southeast
Raleigh, North Carolina

SHEET TITLE:
PHOTOMETRIC SITE PLAN

ISSUE DATE:
8/10/16

PROJECT NO: 15.126
FILE: 15.126
DRAWN BY: JCK/HAS

SHEET OF
PS-1.0

8/10/2016 4:59:37 AM NOT FOR CONSTRUCTION

TYPES S1 THRU S4K

VIPER L SERIES

LARGE VIPER LUMINAIRE

Cat.#		BEACON
Job	Type	Approvals

SPECIFICATIONS

Intended Use:
The Beacon Viper luminaire is available in two sizes with a wide choice of different LED Wattage configurations and optical distributions designed to replace HID lighting up to 1000W MH or HPS allow 5 different mounting options for application in a wide variety of new and existing installations. Luminaires are suitable for wet locations.

Construction:
- One piece optical cartridge system consisting of an LED engine, LED lamps, optics, gasket and stainless steel bezel.
- Cartridge is held together with internal brass standoffs soldered to the board so that it can be field replaced as a one piece optical system.
- Two-piece silicone and micro-cellular polyurethane foam gasket ensures a weath er-proof seal around each individual LED.

LED/Optics:
- LED driver accepts 100V through 277V, 50 Hz to 60 Hz (UNIV), or a driver that accepts 347V or 480V input.
- Power factor is .92 at full load.
- All electrical components are rated at 50,000 hours at full load and 25°C ambient conditions per MIL- 217F Notice 2.
- Dimming drivers are standard with connections for external dimming equipment available upon request.
- Component-to-component wiring within the luminaire may carry no more than 80% of rated load and is listed by UL for use at 600VAC at 50°C or higher.
- Plug disconnects are listed by UL for use at 600 VAC, 13A or higher. 13A rating applies to primary (AC) side only.

Electrical:
- Fixture electrical compartment shall contain all LED driver components and shall be provided with a push-button terminal block for AC power connections.
- The housing is designed for an optional 7-pin twist-lock photo control receptacle.

Controls/Options:
- Proprietary board is tightly integrated to the LED module, for an affordable solution with aggressive return on investment times.
- Battery-backed real time clock.
- With Beacon's optional pre-commisioning service, the field effort can be as simple as installing the luminaires in the proper locations and wirelessly setting the time and date.
- An optional passive infrared motion detector shall be fully integrated into the LED engine.
- The feature shall be wirelessly adjustable with respect to dimmed and high brightness levels, cycle duration, time periods when the motion detection is active, and sensitivity level.
- A luminaire so equipped may also be set as a "master" to remotely drive one or more "satellite" luminaires high upon detecting motion.
- This functionality can be used to limit motion sensors to strategic locations, with "satellites" acting in near unison and with minimal latency.
- An integrated photo sensor can be utilized for daylight harvesting by inhibiting motion activation in the presence of sufficient ambient light.

Installation:
- Optical cartridge is secured to the die cast housing with fasteners.
- Optics are held in place without the use of adhesives.
- Cartridge assembly is available in various lighting distributions using TIR designed acrylic optical lenses over each LED.

Finish:
- Beacote V polyester powder-coat electro-statically applied and thermocured.
- Beacote V finish consists of a five stage pretreatment regimen with a polymer primer sealer and top coated with a thermoset super TGIC polyester powder coat finish.
- The finish meets the AAMA 605.2 performance specification which includes passing a 3000 hour salt spray test for corrosion resistance and resists cracking or loss of adhesion per ASTM D522 and resists surface impacts of up to 160 inch-pounds.

Listings:
The luminaire shall be NRTL certified to UL 1598 and 8750 standards for use in wet locations.

Warranty:
Beacon luminaires feature a 5 year limited warranty. Beacon LED luminaires with LED arrays feature a 5 year limited warranty covering the LED arrays. LED drivers are covered by a 5 year limited warranty.

PRODUCT IMAGE(S)

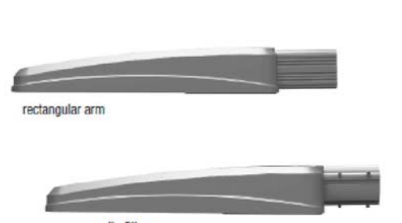

DIMENSIONS

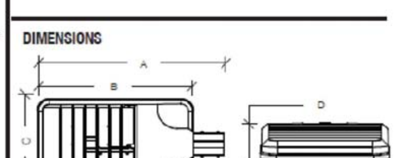

A	B	C	D	Weight:
29.12" (578 mm)	24.19" (425 mm)	14.25" (105 mm)	4.13" (105 mm)	25.0 lbs (11.3 kg)

MOUNTING OPTIONS

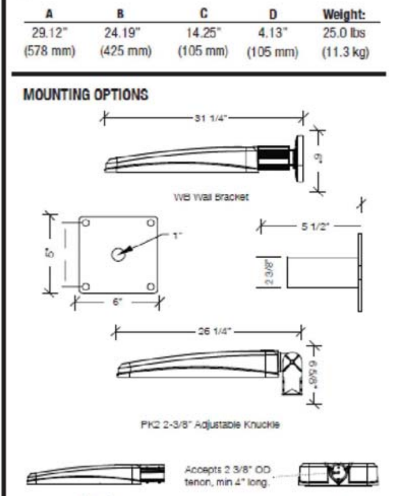

CERTIFICATIONS/LISTINGS

UL 1598 UL 8750

© 2015 BEACON PRODUCTS, All Rights Reserved • For more information visit our website: www.beaconproducts.com • Printed in USA ORB-SPEC 7/15

HUBBELL Lighting

ORDERING INFORMATION

ORDERING EXAMPLE: VPL/96NB-280/5K/T4/UNV/PCR-TL/SF2/GENIXX/BLC/RA/BBT

SERIES
- VPL viper-large

ENGINE-WATTS
- 64NB-135 135W, LED array
- 64NB-190 190W, LED array
- 80NB-180 180W, LED array
- 80NB-235 235W, LED array
- 96NB-220 220W, LED array
- 96NB-280 280W, LED array

LED COLOR
- 3K 3000K
- 4K 4000K
- 5K 5000K

OPTICS[5]
- T1 type I
- T2 type II
- T3 type III
- T4 type IV
- T5R type V, rectangular
- T5QM type V, square medium
- T5W type V, round wide
- FR front row auto optic

VOLTAGE
- UNV 120-277V
- 347V 347V
- 480V 480V

ELECTRICAL OPTIONS
- PCR-TL photocell, twist lock
- PCR-SC photocell, shorting cap
- 2PF[1,2] dual power feed

SENSOR OPTIONS
- OCS occupancy sensor (on/off)
- MDD motion dimming detector

HOUSE SIDE SHIELD OPTIONS
- HSS-90 house side shield 90°
- HSS-180 house side shield 180°
- BLC backlight control[4]

CONTROL OPTIONS
- GENI-XX[3] energeni

FINISH
- BBT basic black textured
- BMT black matte textured
- WHT white textured
- MBT metallic bronze textured
- BZT bronze textured
- DBT dark bronze textured
- GYS gray smooth
- DPS dark platinum smooth
- GNT green textured
- MST metallic silver textured
- MTT metallic titanium textured
- OWI old world iron
- RAL ______

MOUNTING OPTIONS
- RA rectangular arm
- SF2 2 3/8" OD slip-fitter
- PK2 2 3/8" adjustable knuckle
- WB wall bracket

[1] not available with 64NB-135
[2] not available @ 347V or 480V input
[3] DesignLights Consortium Qualified. Refer to www.designlights.org Qualified Products List under Family Models for details.
[4] T4 optic only
[5] When ordering Energeni, specify the routine setting code (example GENI-04). See Energeni brochure and instructions for setting table and options. Not available with sensor options.
[6] To rotate optics Left or right 90 degrees, specify L or R after the optical distribution example T4L

DesignLights Consortium qualified. Consult DLC website for more details: http://www.designlights.org/QPL

PHOTOMETRICS

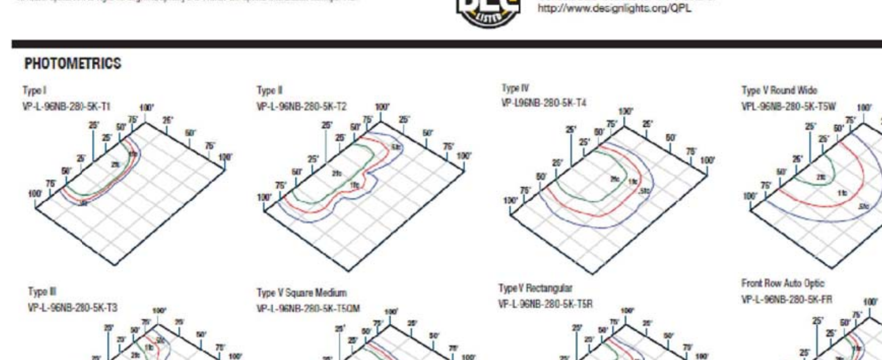

DRILL PATTERN

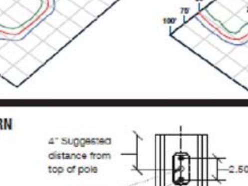

© 2015 BEACON PRODUCTS, All Rights Reserved • For more information visit our website: www.beaconproducts.com • Printed in USA ORB-SPEC 7/15

HUBBELL Lighting

PERFORMANCE DATA

# LED'S	DRIVE CURRENT (MILLIAMPS)	SYSTEM WATTS	DISTRIBUTION TYPE	5K (5000K nominal, 70 CRI) LUMENS	LPW¹	B	U	G	4K (4000K nominal, 70 CRI) LUMENS	LPW¹	B	U	G
64	625 mA	136W	FR/T1	15922	116	2	0	1	15762	115	2	0	1
			T2	14274	104	3	0	3	14131	103	3	0	3
			T3	14137	103	3	0	3	13996	102	3	0	3
			T4	15511	113	2	0	4	15356	112	2	0	3
			T4-BLC	9040	66	0	0	2	8949	65	0	0	2
			T5QM	15511	113	4	0	2	15356	112	4	0	2
			T5R	15785	115	4	0	4	15627	114	4	0	4
			T5W	15372	112	4	0	2	15217	111	4	0	2
80	700 mA	180W	FR/T1	21132	117	2	0	2	20322	113	2	0	2
			T2	18888	105	3	0	4	18699	104	3	0	4
			T3	18700	104	3	0	3	18513	103	3	0	3
			T4	20571	114	3	0	4	20365	113	3	0	4
			T4-BLC	12166	68	1	0	3	12044	67	1	0	3
			T5QM	20571	114	4	0	2	20365	113	4	0	2
			T5R	20944	116	4	0	4	20733	115	4	0	4
			T5W	20290	113	5	0	3	20088	112	5	0	3
80	875 mA	235 W	FR/T1	24866	106	2	0	2	24615	105	2	0	2
			T2	23070	98	3	0	4	22839	97	3	0	4
			T3	21947	93	3	0	4	21725	92	3	0	4
			T4	24360	103	3	0	4	24028	102	3	0	5
			T4-BLC	14633	62	1	0	3	14487	62	1	0	3
			T5QM	23138	98	4	0	2	22905	97	4	0	2
			T5R	24779	105	5	0	5	24541	104	5	0	5
			T5W	24175	103	5	0	3	23931	102	5	0	3
96	700 mA	220 W	FR/T1	25358	113	2	0	2	25104	112	2	0	2
			T2	22665	101	3	0	4	22438	100	3	0	4
			T3	22440	100	3	0	4	22216	99	3	0	4
			T4	24685	110	3	0	5	24438	109	3	0	5
			T4-BLC	14984	67	1	0	3	14834	66	1	0	3
			T5QM	24685	110	4	0	2	24438	109	4	0	2
			T5R	25133	112	5	0	5	24882	111	5	0	5
			T5W	24349	109	5	0	3	24106	108	5	0	3
96	875 mA	280 W	FR/T1	29839	106	3	0	2	29541	105	3	0	2
			T2	27369	98	4	0	5	27096	97	4	0	5
			T3	26336	93	3	0	4	26073	92	3	0	4
			T4	29128	102	3	0	5	28837	103	3	0	5
			T4-BLC	17564	65	1	0	4	17389	65	1	0	4
			T5QM	28889	103	5	0	3	28601	102	5	0	3
			T5R	29184	105	5	0	5	28893	104	5	0	5
			T5W	29010	102	5	0	4	28720	101	5	0	4

¹Lumen values are from photometric tests performed in accordance with IESNA LM-79-08. Data is considered to be representative of the configurations shown. Actual performance may differ as a result of end-user environment and application.

ELECTRICAL DATA

# OF LEDS	NUMBER OF DRIVERS	DRIVE CURRENT (mA)	INPUT VOLTAGE (V)	SYSTEM POWER (w)	CURRENT (Amps)
64	1	625	120	136	1.1
			277		0.5
			347		0.4
			480		0.3
80	2	700	120	180	1.5
			277		0.6
			347		0.5
			480		0.4
80	2	875	120	235	2.0
			277		0.8
			347		0.7
			480		0.5
96	2	700	120	220	1.8
			277		0.8
			347		0.6
			480		0.5
96	2	875	120	280	2.3
			277		1.0
			347		0.8
			480		0.6

PROJECTED LUMEN MAINTENANCE

AMBIENT TEMP.	0	25,000	50,000	¹TM-21-11 60,000	100,000	Calculated L70 (HOURS)
25°C / 77°C	1.00	0.91	0.86	0.84	0.77	>143,000

¹ Projected per IESNA TM-21-11
Data references the extrapolated performance projections for the base model in a 40°C ambient, based on 10,000 hours of LED testing per IESNA LM-80-08.

AMBIENT TEMPERATURE		LUMEN MULTIPLIER
0°C	32°F	1.02
10°C	50°F	1.01
20°C	68°F	1.00
25°C	77°F	1.00

Use these factors to determine relative lumen output for average ambient temperatures from 0-50°C (32-122°F).

© 2015 BEACON PRODUCTS, All Rights Reserved • For more information visit our website: www.beaconproducts.com • Printed in USA ORB-SPEC 7/15

HUBBELL Lighting

TYPES S1 THRU S3

Utilities Structures, Inc.
PO Box 9303 Ft Myers, Fl. 33901
Ph. 1-800-798-7653 Fax. 1-941-332-7132
"Your Prestressed Concrete Pole Producer"

Pole #1

USI34TIIH10676-SZT

Prestressed Concrete Pole

- Pole Weight= 2,120lbs
- EPA capacity=
- Wind speed= 140 mph Vult
- Exposure "C"
- Risk Category II
- Gust Factor = 1.2
- 2012 NCBC 1609, 1819
- ASCE 7-05
- Min. Brk. Strength= 2400#
- Concrete= 6,500lbs @ 28 days
- Grd. Wire= #6 str. copper
- Strand= (4) .500" 270ksi lo-lax @ 70% Ultimate
- Tenon= 2.375" od x 5" h – "SZT"
- Color= Natural Concrete

SELECT STRUCTURAL, LLC.
SHAWN R. ANDERSON, P.E. S.E.

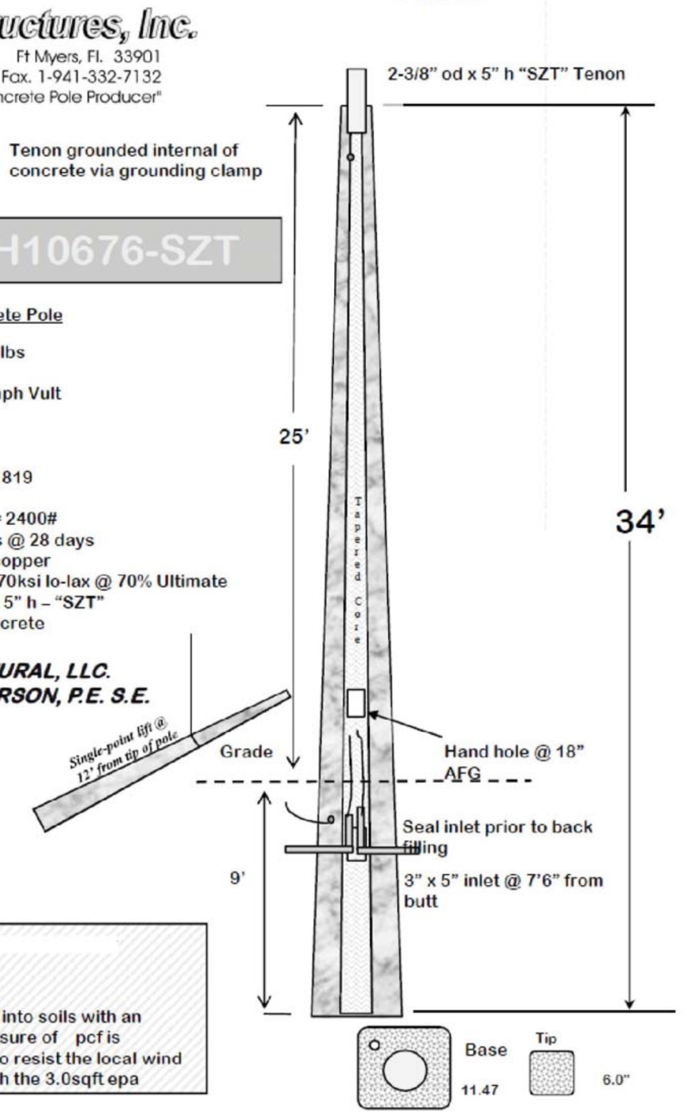

This pole embedded 9' into soils with an allowable passive pressure of pcf is structurally adequate to resist the local wind speeds of Co. with the 3.0sqft epa attached.

TYPES S4K

Utilities Structures, Inc.
PO Box 9303 Ft Myers, Fl. 33901
Ph. 1-800-798-7653 Fax. 1-941-332-7132
"Your Prestressed Concrete Pole Producer"

Pole #2

USI34TIIH13076-K-SZT

Prestressed Concrete Pole

- Pole Weight= 2,120lbs
- EPA capacity=
- Wind speed= 140 mph Vult
- Exposure "C"
- Risk Category II
- Gust Factor = 1.2
- 2012 NCBC 1609, 1819
- ASCE 7-05
- Min. Brk. Strength= 2400#
- Concrete= 6,500lbs @ 28 days
- Grd. Wire= #6 str. copper
- Strand= (4) .500" 270ksi lo-lax @ 70% Ultimate
- Tenon= 2.375" od x 5" h – "SZT"
- Color= Natural Concrete

SELECT STRUCTURAL, LLC.
SHAWN R. ANDERSON, P.E. S.E.

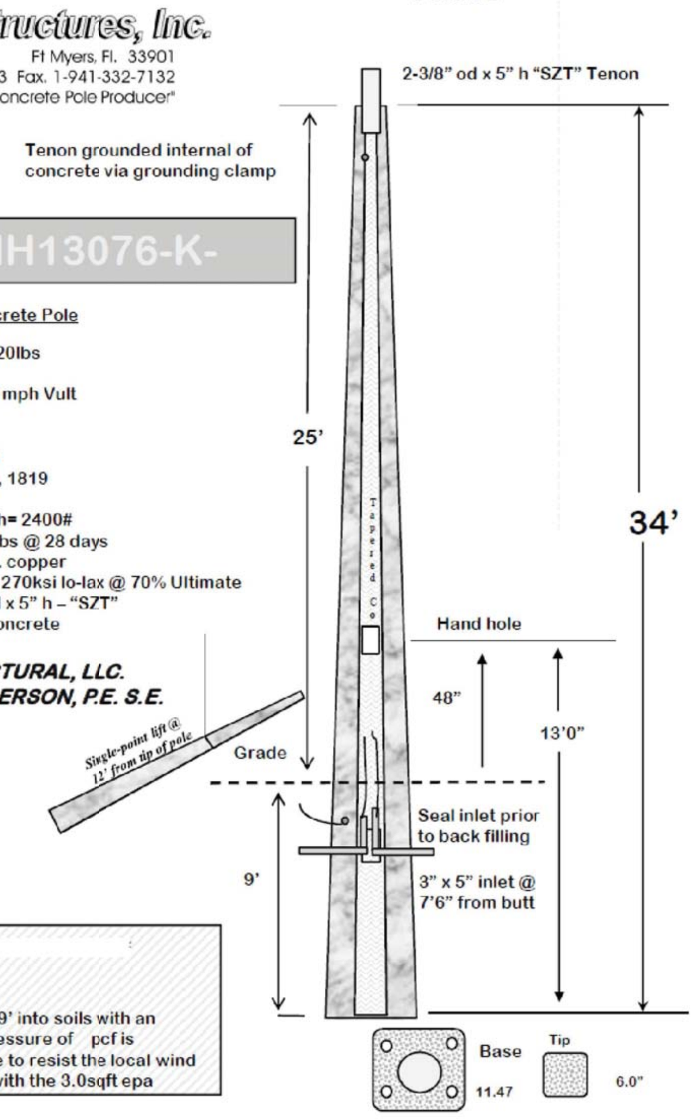

This pole embedded 9' into soils with an allowable passive pressure of pcf is structurally adequate to resist the local wind speeds of Co. with the 3.0sqft epa attached.

BEACON design . performance . technology
www.beaconproducts.com

Type: TYPE E11
Project Name:
Notes:

rev. 09.21.2015
TRAVERSE (LED)
Traverse Wall Pack
Max Weight: 24.0 lbs

	A	B	C	D	E	F	G	H
Sample	TRV-D	60NB-136	5K	T5R	UNV	GENIXX	PEC	BBT
Ordering								

DETAILS

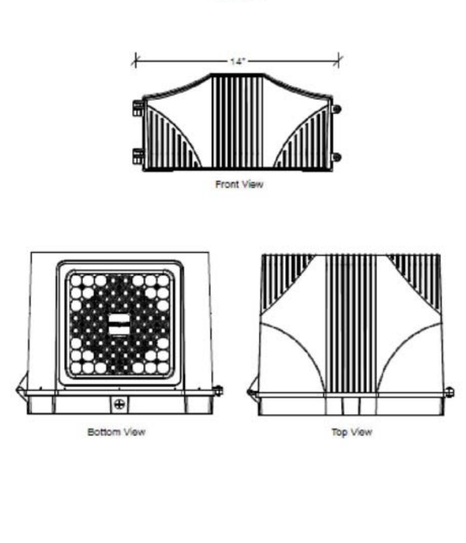

A. MODEL
- TRV-D Traverse down light
- TRV-U Traverse up light (lens req.)[1]

B. ENGINE-WATTS
- 24NB-27 27 Watts - LED array
- 24NB-55 55 Watts - LED array
- 36NB-80 80 Watts - LED array
- 48NB-110 110 Watts - LED array
- 60NB-136 136 Watts - LED array

C. CCT - COLOR TEMP
- 3K 3000K
- 4K 4000K
- 5K 5000K (std.)

D. OPTICS
- T2 type II
- T3 type III
- T4 type IV
- T5R type V, rectangular
- 2X2 narrow spot flood
- 5X5 medium flood

E. VOLTAGE
- UNV 120-277V
- 347 347V
- 480 480V

F. CONTROL OPTIONS
- GENI-XX Energeni[7]

G. ELECTRICAL OPTIONS
- PEC photocell, button
- 2PF dual power feed[2,3]
- MOB motion sensor 33% or 50%
- dimming[5,6]
- OCS occupancy sensor (on/off)
- BPC cold weather battery pack[4]

H. COLOR
- BBT basic black textured
- BMT black matte textured
- WHT white textured
- MBT metallic bronze textured
- BZT bronze textured
- DBT dark bronze textured
- GYS gray smooth
- DPS dark platinum smooth
- GNT green textured
- MST metallic silver textured
- MTT metallic titanium textured
- OWI old world iron
- RAL ______

MOB ORDERING INFORMATION: When ordering a fixture with the motion detection option (MOB), please specify the appropriate information. These settings are specified in the ordering as shown in the example below.

TRV-D / 48E-63 / AMB / T5SW / 180 / UNV / **MOB** - 1 to 30 min. - 33% or 50% - ?? / MT

High to Dim Delay Low Level Mounting Height (ft.)

[1] indoor use only
[2] not available on 24ONB-27
[3] not available @ 347V or 480V input
[4] 36NB-80 only
[5] not available on 48NB-110
[6] not available on 60NB-136
[7] When ordering Energeni, specify the routine setting code (example GENI-04). See Energeni brochure and instructions for setting table and options. Not available with sensor options.

BEACON design . performance . technology

rev. 09.21.2015
TRAVERSE (LED)
Traverse Wall Pack
Max Weight: 24.0 lbs

General: The Beacon TRV luminaire is a wall surface mounted luminaire with a field replaceable LED light engine & optical bezel system. Internal components are totally enclosed in rain-tight and corrosion-resistant die cast aluminum housing. The TRV Luminaire is suitable for wet locations.

Housing/LED Thermal Management: The Beacon TRV luminaire consists of a die cast aluminum two-piece housing. The die cast main (thermal) housing provides direct heat exchange between the LED light engine and the cool outdoor air by drawing heat through integral heat channels and out to the sculptured and functional luminaire surface. LED drivers are thermally isolated from the main housing, mechanically attached and heat sinked to the rear housing The main housing is designed with heat dissipating fins for LED thermal management without the use of metallic screens, cages, or fans. The shape of the main housing is designed to prevent debris accumulation and as a bird nesting deterrent. The back and main housings are designed to hinge open for easy mounting and easy access.

Mounting & Installation: The rear housing (back plate) is designed with various bolt patterns for direct wall mounting or mounting to a recessed 4" junction box. The rear housing has three integral 3/4" NPT power feed locations (bottom and each side) for surface mounted conduit applications. After mounting the rear housing to the wall or junction box, the main housing is designed to hang and hinge closed after connecting the male and female quick connectors. The mounting design permits a simple retrofit to existing wall luminaires that utilize surface mount or recessed junction boxes.

Bezel Optical System: Each Traverse luminaire is supplied with an Optical one piece cartridge system consisting of an LED engine, LED lamps, optics, gasket and stainless steel bezel. The cartridge is held together with internal brass standoffs soldered to the board so that it can be field replaced as a one piece Optical system. A two-piece die cut silicone and polycarbonate foam gasket ensures a weather-proof seal around each individual LED and allows the Traverse luminaire to be rated for high-pressure hose down applications.

The optical cartridge is secured to the extruded housing with fasteners and a heat pad to ensure thermal conductivity. The optics are held in place without the use of adhesives and the complete assembly is gasketed for high pressure hose down cleaning. The cartridge assembly is available in various lighting distributions using TIR designed Acrylic optical lenses over each LED.

Printed Circuit Board (PCB): Aluminum thermal clad board with 0.062" thick aluminum base layer "high temperature" HT-06503 or equivalent (subject to change) dielectric (0.003" thick, thermal conductivity of 2.2 W/MK, UL RTI of 140°C) 0.0014" thick copper circuit layer Circuit layer designed with copper pours to minimize thermal impedance across dielectric. Board shall be supplied with QPAD-3 fiberglass reinforced thermal pad 0.005" thick thermal conductivity of 2.0 W/Mk. Continuous use temperature of 180°C UL94 V-0. Board will be mounted to the heat sink using 12 #4-40 screws to ensure contact with thermal pad and heat sink. Use of thermal grease will not be allowed.

LifeShield™ Circuit: (optional) Thermal circuit shall protect the luminaire from excessive temperature by interfacing with its 0-10V dimmable drivers to reduce drive current as necessary. The factory-preset temperature limits shall be designed to ensure maximum hours of operation to assure L70 rated lumen maintenance. The device shall activate at a specific, factory-preset temperature, and progressively reduce power over a finite temperature range in recognition of the effect of reduced current on the internal temperature and longevity of the LEDs and other components.

A luminaire equipped with the device may be reliably operated in any ambient temperature up to 55°C (131°F).

The LifeShield™ thermal regulation circuit will allow higher maximum Wattages than would be permissible on an unregulated luminaire (if some variation in light output is permissible), without risk of premature LED failure. Operation shall be smooth and undetectable to the eye. Thermal circuit shall directly measure the temperature at the LED solder point. LifeShield™ shall consist of surface mounted components mounted on the LED engine (printed circuit board). For maximum simplicity and reliability, the device shall have no dedicated enclosure, circuit board, wiring harness, gaskets, or hardware. Device shall have no moving parts, and shall operate entirely at low voltage (NEC Class 2). The device shall be located in an area of the luminaire that is protected from the elements.

LifeShield™ shall be designed to "fail on", allowing the luminaire to revert to full power in the event of an interruption of its power supply, or faulty wiring connection to the drivers.

Device shall be able to co-exist with other 0-10V control devices (occupancy sensors, external dimmers, etc.). The device will effectively control the solder point temperature as needed; otherwise it will allow the other control device(s) to function unimpeded.

Motion Activated Luminaires: Beacon TRV luminaires are available with an optional passive infrared (PIR) motion sensor capable of detecting motion within 24 feet of the sensor, 360° around the luminaire, when placed at an 8 foot mounting height. When no motion is detected for 5 minutes, the Motion Response system reduces the Wattage from 10% to 50% (factory set at 50% reduction) of the maximum Wattage, reducing the light level accordingly. When motion is detected by the PIR sensor, the luminaire returns to full Wattage and full light output. Please contact Beacon Products if project requirements vary from standard configuration.

Electrical: Luminaires are equipped with an LED driver that accepts 100V through 277V, 50 Hz to 60 Hz (UNIV), or a driver that accepts 347V or 480V input. Power factor is .92 at full load. All electrical components are rated at 50,000 hours at full load and 40°C ambient conditions per MIL-217F Notice 2. Optional 0 to 10 volt dimming drivers are available upon request. Component-to-component wiring within the luminaire may carry no more than 80% of rated load and is listed by UL for use at 600VAC at 50°C or higher. Plug disconnects are listed by UL for use at 600 VAC, 15A or higher. 15A rating applies to primary (AC) side only.

Surge Protector: The on-board surge protector shall be a UL recognized component for the United States and Canada and have a surge current rating of 20,000 Amps using the industry standard 8/20 µSec wave. The LSP shall have a clamping voltage of 825V and surge rating of 540J. The case shall be a high-temperature, flame resistant plastic enclosure.

Cold Weather Battery Pack: The emergency driver shall be capable of operating an LED load of up to 23.1 Watts at rated current (700 mA) for a minimum of 90 minutes. It is suitable for damp locations as well as sealed and gasketed fixtures. The BPC shall have 37 Watts of input power and a 54.0 Watts-hour battery capacity and shall comply with emergency standards set forth by the current NEC.

Fasteners: All fasteners shall be stainless steel. When tamper resistant fasteners are required, spanner HD (snake eye) style shall be provided (special tool required, consult factory).

Power Supply/Driver Requirements: U.L. UL1310, Class 2 and UL48 compliant

Color Rendering Index (CRI): Luminaire shall have a minimum CRI of 67 at 5000K.

Operating Environment: Shall be able to operate normally in ambient temperatures from -40°C to 40°C.

Finish: Finish shall be a Beacote V polyester powder-coat electro-statically applied and thermocured. Beacote V finish shall consist of a five stage iron phosphate chemical pretreatment regimen with a polymer primer sealer, oven dry off, and top coated with a thermoset super TGIC polyester powder coat finish. The finish shall meet the AAMA 605.2 performance specification which includes passing a 3000 hour salt spray test for corrosion resistance and resists cracking or loss of adhesion per ASTM D522 and resists surface impacts of up to 160 inch-pounds.

Agency Certification: The luminaire shall bear a CSA label and be marked suitable for wet locations.

Warranty: Beacon luminaires feature a 5 year limited warranty. Beacon LED luminaires with LED arrays feature a 5 year limited warranty covering the LED arrays. LED drivers are covered by a 5 year limited warranty. PIR sensors carry a 5 year limited warranty from the sensor manufacturer. See Warranty Information on www.beaconproducts.com complete details and exclusions.

Power/Lumens & Distribution

Engine	Wattage	Delivered Lumens (varies by optic)	Delivered LPW	TM21 Calculated % Lumen Maint. at 100,000 hrs
24NB	27	2782-3014	105-115	96.19%
24NB	55	5138-5500	93-100	96.19%
36NB	80	6938-8215	93-103	94.87%
48NB	110	10240-10950	93-100	92.73%
60NB	136	12800-13700	93-103	85.79%

TM21 is the framework for taking LM-80 data and making useful LED lifetime projections. Reported and Calculated Lifetimes shown are based on hours at the time of this printing. For current Reported and Calculated hours please contact factory or Beacon's web-site.

CCT (COLOR TEMP) Lumen Output Multipliers	CRI (Color Rendering)
5000K = 1.0	min 67 CRI
4000K = .92	min 70 CRI
3000K = .75	min 80 CRI

Due to our continued efforts to improve our products, product specifications are subject to change without notice.

Hiscutt & Associates
ARCHITECTURE
3655 Brookside Parkway
Suite 575
Alpharetta, Georgia 30022
Phone: 770.753.8787
Web: www.hiscutt-aia.com

08/10/16

THESE DOCUMENTS ARE INSTRUMENTS OF SERVICE FOR USE SOLELY WITH RESPECT TO THIS PROJECT AND ARE NOT TO BE REPRODUCED OR USED FOR THE CONSTRUCTION OF ANOTHER PROJECT WITHOUT SPECIFIC AUTHORIZATION. COPYRIGHT 2016 HISCUTT & ASSOCIATES, INC.

PROJECT:
EGRET LANDING SHOPPING CENTER
Emerald Drive and Mallard Drive
Emerald Isle, North Carolina

FOR:
Crosland Southeast
Raleigh, North Carolina

SHEET TITLE:
FIXTURE CUT SHEETS

ISSUE DATE:
8/10/16

PROJECT NO: 15.126
FILE: 15.126
DRAWN BY: JCK/HAS

SHEET OF
PS-2.0

APOLLO ENGINEERING, INC
CONSULTING ENGINEERS
C-4043
6544 U.S. Hwy 41 North, Suite 209B, Apollo Beach, FL 33572
Phone: 813.938.5803 / Fax: 813.938.5805
Job # 10074

Copyright 2016 - All rights reserved.

8/10/2016 9:53:37 AM NOT FOR CONSTRUCTION

I, W. ROBERT MURPHY, CERTIFY THAT THIS PROJECT WAS COMPLETED UNDER MY DIRECT AND RESPONSIBLE CHARGE FROM AN ACTUAL SURVEY MADE UNDER MY SUPERVISION; THAT THIS GROUND SURVEY WAS PERFORMED AT THE 90 PERCENT CONFIDENCE LEVEL TO MEET FEDERAL GEOGRAPHIC DATA COMMITTEE STANDARDS; THAT THIS SURVEY WAS PERFORMED TO MEET THE REQUIREMENTS FOR A TOPOGRAPHIC/PLANIMETRIC SURVEY TO THE ACCURACY OF CLASS AA AND VERTICAL ACCURACY WHEN APPLICABLE TO THE CLASS C STANDARD, AND THAT THE ORIGINAL DATA WAS OBTAINED ON NOVEMBER 12-20, 2015; AND ALL COORDINATES ARE BASED ON NAD 83 AND ALL ELEVATIONS ARE BASED ON NAVD 88.

NORTH CAROLINA PROFESSIONAL L-4677 LAND SURVEYOR W. ROBERT MURPHY

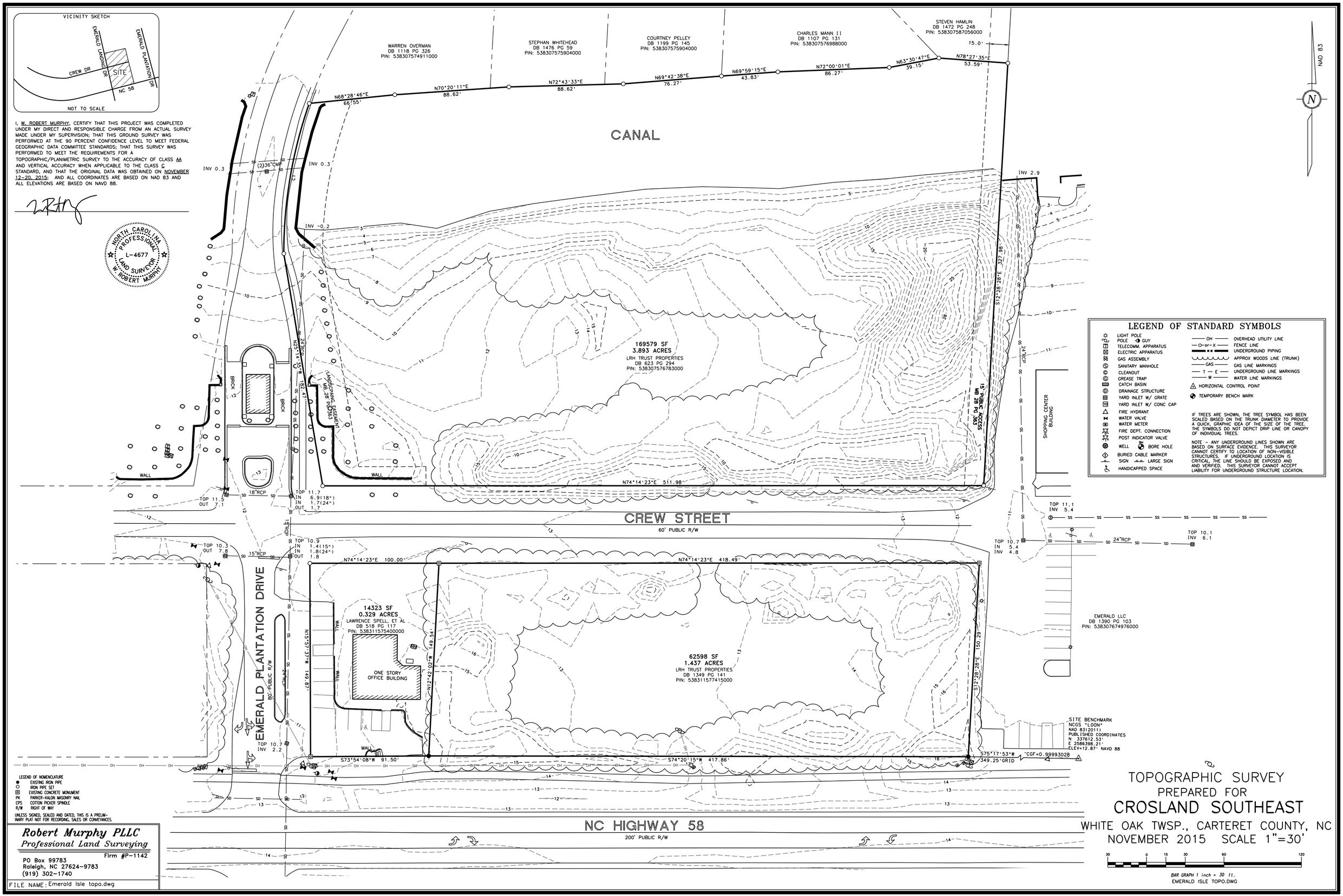

LEGEND OF STANDARD SYMBOLS

- LIGHT POLE
- POLE — GUY
- TELECOMM. APPARATUS
- ELECTRIC APPARATUS
- GAS ASSEMBLY
- SANITARY MANHOLE
- CLEANOUT
- GREASE TRAP
- CATCH BASIN
- DRAINAGE STRUCTURE
- YARD INLET W/ GRATE
- YARD INLET W/ CONC CAP
- FIRE HYDRANT
- WATER VALVE
- WATER METER
- FIRE DEPT. CONNECTION
- POST INDICATOR VALVE
- WELL — BORE HOLE
- BURIED CABLE MARKER
- SIGN — LARGE SIGN
- HANDICAPPED SPACE
- OH — OVERHEAD UTILITY LINE
- O—or—X — FENCE LINE
- UNDERGROUND PIPING
- APPROX WOODS LINE (TRUNK)
- GAS — GAS LINE MARKINGS
- T — E — UNDERGROUND LINE MARKINGS
- W — WATER LINE MARKINGS
- HORIZONTAL CONTROL POINT
- TEMPORARY BENCH MARK

IF TREES ARE SHOWN, THE TREE SYMBOL HAS BEEN SCALED BASED ON THE TRUNK DIAMETER TO PROVIDE A QUICK, GRAPHIC IDEA OF THE SIZE OF THE TREE. THE SYMBOLS DO NOT DEPICT DRIP LINE OR CANOPY OF INDIVIDUAL TREES.

NOTE – ANY UNDERGROUND LINES SHOWN ARE BASED ON SURFACE EVIDENCE. THIS SURVEYOR CANNOT CERTIFY TO LOCATION OF NON-VISIBLE STRUCTURES. IF UNDERGROUND LOCATION IS CRITICAL, THE LINE SHOULD BE EXPOSED AND AND VERIFIED. THIS SURVEYOR CANNOT ACCEPT LIABILITY FOR UNDERGROUND STRUCTURE LOCATION.

LEGEND OF NOMENCLATURE

- EXISTING IRON PIPE
- IRON PIPE SET
- EXISTING CONCRETE MONUMENT
- PK PARKER-KALON MASONRY NAIL
- CPS COTTON PICKER SPINDLE
- R/W RIGHT OF WAY

UNLESS SIGNED, SEALED AND DATED, THIS IS A PRELIMINARY PLAT NOT FOR RECORDING, SALES OR CONVEYANCES.

Robert Murphy PLLC
Professional Land Surveying
Firm #P-1142
PO Box 99783
Raleigh, NC 27624-9783
(919) 302-1740

FILE NAME: Emerald Isle topo.dwg

TOPOGRAPHIC SURVEY
PREPARED FOR
CROSLAND SOUTHEAST
WHITE OAK TWSP., CARTERET COUNTY, NC
NOVEMBER 2015 SCALE 1"=30'

30 0 15 30 60 120

BAR GRAPH 1 inch = 30 ft.
EMERALD ISLE TOPO.DWG